3M DMS 700





Brief Introduction Beta 2.5	The 3M DMS 700 DLP projector has 1500 Ansi lumens, a contrast of 1200:1 and an XGA 1024 x 768 resolution. The integrated media player allows files to be played directly. The horizontal and vertical keystone correction provides leeway when setting up. Thanks to the short throw projection ratio of just 0.619:1, the projector does not distort the room. For a 2m wide image, the projector only needs to be 124 cm away from the screen. The model built in 2006 is no longer offered by 3M.
Display Type	1 x 0,7" DLP Chip XGA 4/3 Ti Digital Light Processing Chip
Ansi-Lumen	Projector: 1500 / Screen: 485 Lux (bei 203 cm Screen)
Contrast	Projector: 1200:1 full on/off / Screen: 1200:1 full on/off
Black Level Offset	Projector: 1,2500 min. Lumen / Screen: 0.405 min. Lumen
Resolution	XGA 1024 x 768 786.432 Pixel SXGA 1280 x 1024 compressed
Video Modes	PAL, SECAM, NTSC, HDTV 720p, 1080i, EDTV 480p, 576p **Media player formats:** JPEG
Disc Recognition	DVD | HD Blu-ray (komprimiert) | ~~3D Blu-ray~~ | ~~4K UHD Blu-ray~~
Application	Short Distance | Small screen width, rooms with very little ambient light below 100 lumens.
Light Source	230W Lamp Articel Nr.: 78-6969-9881-0
Light Life	2000 h. 3000 h. in Eco Mode
Operating Costs	-
Focus	Manual
Zoom	No Zoom
Objective	F=2,4 f=9,6mm
Throw Ratio	0,619:1
Audio	2 x 2,5W
Connections	HDMI in D-sub 15pin in YUV in S-Video in Cinch Video in Coaxial out RS232C

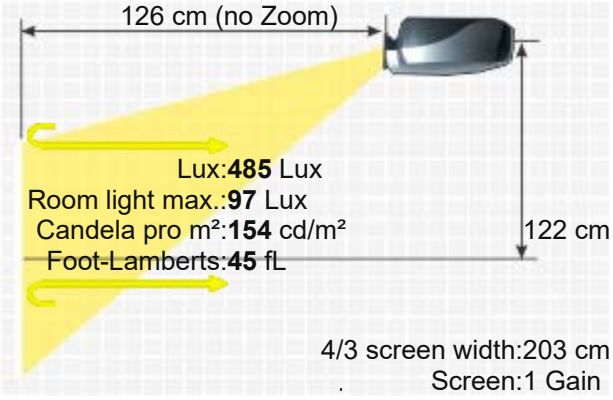

USB in



Ceiling Mounting	Ja
Power	285W
Size WxHxD	343,5 x 153,3 x 312,6 mm (13,5"x6"x12,3") 16,37 L/dm³
Operating Noise	-

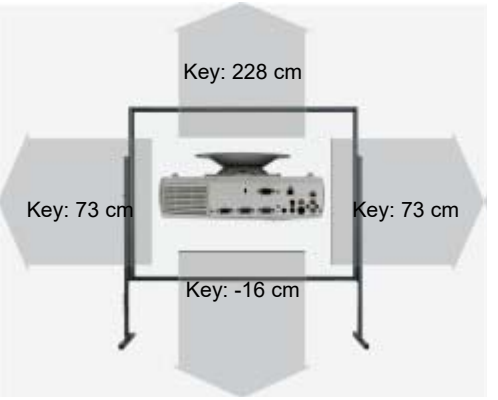

Weight	4,50 kg / 9,92 lbs.
Keystone	Vert.: +/-40° Hori.: +/-30°
Illumination	-
Frequenz	H-sync: 15-82 kHz V-sync: 15-85 Hz
Foot-Lamberts	45 fL / max. 337 cm screen width 154 cd/m²

Features

- Integrated Mediaplayer
- Freeze
- Eco Mode
- Kensington Slot
- Gamma correction
- Picture-in-Picture
- Short-throw projector
- Digital Zoom
- Dolby 2.0 / (2) 2.5W speakers

Optional

Osram bulb only	NLMP16526
Lamp ruby	Ruby-LMP16526
Lamp original	78-6969-9881-0
Compatible lamp	LMP-K16526
Universal Remote original	Fernb-uni-V3
Ceiling Mount 100-120	Halterung100

Order here: https://www.hcinema.de/lampen/shop-en.php?id=n16985

Status: 2006 Discontinued (EOL) // Last update of the data: 2023-08-04

Data



More Details

https://www.projector-database.com/pro/3mdms700-en.html

Due to our ongoing commitment to continuously improve the quality of our projector database, this brochure is also subject to change without notice. HCinema is not responsible for any errors or omissions contained in product descriptions.