Videoseven PD230X



Brief Introduction Beta 2.5	The standard portable Videoseven PD230X DLP projector has 2100 Ansi lumens, a contrast of 2000:1 and an XGA 1024 x 768 resolution. The horizontal and vertical keystone correction provides leeway when setting up. Thanks to the brightness of 2100 Ansi lumens, a picture width of 399 cm is possible. In room light, the picture should be max. 266 cm wide. It was launched in 2004 and is no longer offered by the manufacturer Videoseven.
Display Type	1 x 0,7" DDR 12 Grad DLP Chip XGA 4/3 Ti Digital Light Processing Chip
Projector: Ansi-Lumen	2100
Projector: Contrast	2000:1 full on/off
Projector: Black Level	1,0500 min. Lumen
Screen	700 Lux (200 cm Screen width) 2000:1 full on/off 0,351 min. Lumen
Offset	
Resolution	XGA 1024 x 768 786.432 Pixel
Video Modes	PAL, PAL-M, PAL-N, PAL-60, SECAM, NTSC, EDTV HDTV 720p, 1080i,
Application	Standard-Portabel | External training and company presentations, as well as product presentations. Medium screen width or rooms with little light, max. 100 lumens.
Light Source	200W P-VIP Lamp Article Nr.: PD 230X
Light Life	2000 h.
Operating Costs	-
Focus	Manual
Zoom	Manual 1,19
Objective	F=2,2-2,64 f=23,6-28,2 mm
Throw Ratio	1,64-1,96:1
Audio	1 x 2W
Connections	DVI-I D-sub 15pin in und out Cinch Video in S-Video in USB RS232C
Ceiling Mounting	Yes, is possible.
Power	270W
Size WxHxD	285 x 86 x 210 mm (11,2"x3,4"x8,3") 5,15 L/dm³

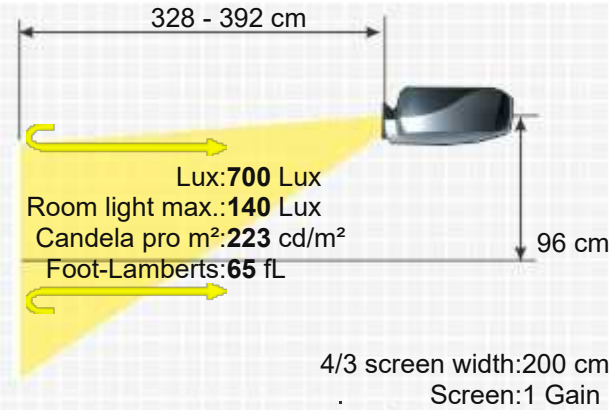

VIDEOSEVEN PD230X

Operating Noise	33dB
Weight	2,60 kg / 5,73 lbs.
Keystone	Vert.: +/-20° Hori.: +/-10°
Illumination	80%
Frequenz	H-sync: 15-80 kHz V-sync: 29,97-85 Hz Range max.: 140 MHz
Foot-Lamberts	65 fL / max. 399 cm screen width 223 cd/m²
Features	■ Freeze ■ Blank (Black screen button) ■ Kensington Slot ■ Gamma correction ■ Picture-in-Picture ■ Remote control with laser pointer und mouse control
Screen Mirroring	Optional only Chromecast / Fire TV / Apple TV / Mi Box Ads

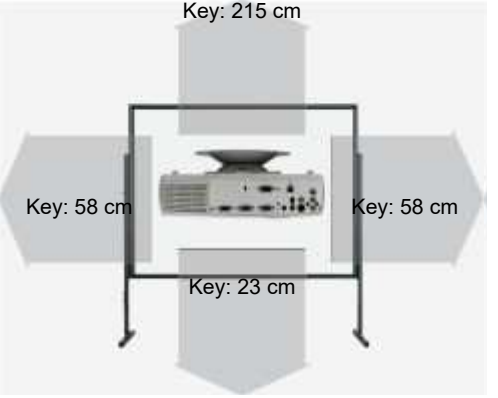

Optional accessories



Deckenhalterung Länge 100-120 mm — Halterung120 — 47,86 €

Status: 2004 Discontinued (EOL) // Last update of the data: 2026-06-09

Data



More Details

HCinema

https://www.projector-database.com/pro/VideosevenPD230X-en.html

Due to our ongoing commitment to continuously improve the quality of our projector database, this brochure is also subject to change without notice. HCinema is not responsible for any errors or omissions contained in product descriptions.