# Aopen AH15



AOPEN AH15

| | |
|---|---|
| Brief Introduction<br>Beta 2.5 | The Aopen model AH15 is a DLP LED projector with HDTV 1280 x 720 resolution and a contrast of 10000:1. Manufacturer Aopen specifies a service life of 20000 hours, which is over 13.7 years if enjoyed for four hours a day. The projector can illuminate a picture width of up to 124 cm well thanks to the 150 Ansi lumens. In room light, however, the image width should ideally be less than 83 cm. Thanks to the built-in 4000 mAh / 2 hours ECO battery, no power supply is required, allowing the projector to be set up quickly and flexibly. It is also Full HD 1080P compatible. With only 30 decibels of operating noise, the model is already very quiet compared to others. The model was built by Aopen in 2020 and is no longer current. |
| Display Type | 1 x DLP Chip<br>HDTV 16/9 Ti Digital Light Processing Chip |
| Projector: Ansi-Lumen | 150 |
| Projector: Contrast | 10000:1 |
| Projector: Black Level | 0,0150 min. Lumen |
| Screen | 65 Lux (bei 203 cm Screen) |
| Screen | 10000:1 |
| Screen | 0.007 min. Lumen |
| Offset | |
| Resolution | HDTV 1280 x 720<br>921.600 Pixel<br>HDTV 1920 x 1080 compressed |
| Video Modes | Pal, SECAM, NTSC, HDTV 720p, 1080i, 1080p, EDTV 480p, 576p |
| Application | Game-Portabel \| Very portable, small-screen projections.<br>Very narrow picture width and rooms with very little light. |
| Light Source | LED |
| Light Life | 20000 h. / 30000 h. in Eco Mode |
| Operating Costs | 0,00 € LED |
| Focus | Manual |
| Zoom | - |
| Objective | - |
| Throw Ratio | - |
| Audio | 2 x 5W |
| Connections | Input<br>1 x HDMI (Video, Audio)<br>1 x SD (Micro, SDHC)<br>1 x USB (Type A)<br>1 x USB (Type C)<br><br>Output<br>1 x Kopfhörerausgang (Stereo-Mini-Buchse) |

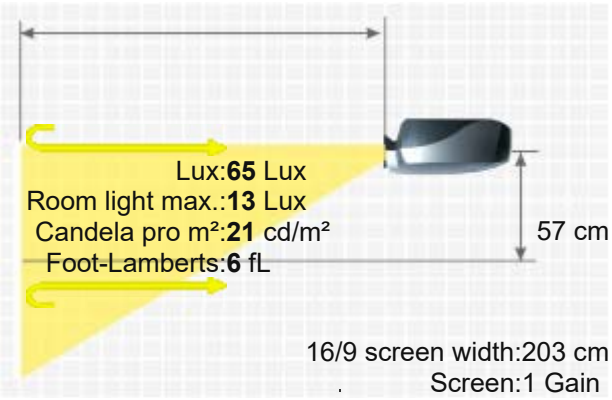




| | |
|---|---|
| Ceiling Mounting | Yes |
| Power | - |
| Size WxHxD | 86 x 86 x 136 mm (3,4"x3,4"x5,4") 1,01 L/dm³ |
| Operating Noise | 30dB |
| Weight | 0,756 kg / 0 lbs. |
| Keystone | Vert.: +/-15° automatisch |
| Illumination | - |
| Frequenz | - |
| Foot-Lamberts | 6 fL / max. 124 cm screen width<br>21 cd/m² |
| Features | ■ Full HD 1080P compatible<br>■ Eco Mode<br>■ Automatic and manual vertical keystone correction<br>■ Wi-Fi network compatible.<br>■ 4000 mAh / 2 Stunden im ECO |
| Status | 2020 Discontinued (EOL) // Last update of the data: 2024-10-02 |
| Data |  |

More Details

HCinema

https://www.projector-database.com/pro/acerah15-en.html

Due to our ongoing commitment to continuously improve the quality of our projector database, this brochure is also subject to change without notice. HCinema is not responsible for any errors or omissions contained in product descriptions.