Acer P1203 / P



Brief Introduction Beta 2.5	The Acer P1203 / P standard portable 3D BrilliantColor DLP projector has 3100 Ansi lumens, a contrast of 3700:1 and an XGA 1024 x 768 resolution. 3100 Ansi lumens ensure that a picture width of 485 cm is also possible. However, if room light is available, the picture should be a maximum of 323 cm wide. Playing 1080P is also no problem for the projector. The projector was launched in 2010 and is no longer sold by the manufacturer.	
Display Type	1 x 0,55" DC3 DLP Chip XGA 4/3 Ti Digital Light Processing Chip	
Projector		
Ansi-Lumen	3100 / 2480 im Eco Mode	
Contrast	3700:1 full on/off	
Black Level	0,8378 min. Lumen	
Offset		
Screen		
	1003 Lux (bei 203 cm Screen)	
	3700:1 full on/off	
	0.271 min. Lumen	
Resolution	XGA 1024 x 768 786.432 Pixel UXGA 1600 x 1200 compressed	
Video Modes	PAL, SECAM, NTSC, HDTV 720p, 1080i, 1080p EDTV 480p, 576p	
3D Compatibility	Frame Sequential (3D Ready)	
Application	Standard-Portabel | External training and company presentations, as well as product presentations. Medium screen width or rooms with a little more ambient light, max. 200 lumens.	
Light Source	230W P-VIP Lamp Articel Nr.: EC.K1700.001	
Light Life	2500 h. 4000 h. in Eco Mode	
Operating Costs	-	
Focus	Manual	
Zoom	Manual 1,1	
Objective	F=2,41-2,55 f=21,79-23,99 mm	
Throw Ratio	1,95-2,15:1	
Audio	1 x 2W	
Connections	HDMI in D-sub 15 pin in und out S-Video in Cinch Video in USB Typ B RS232C	

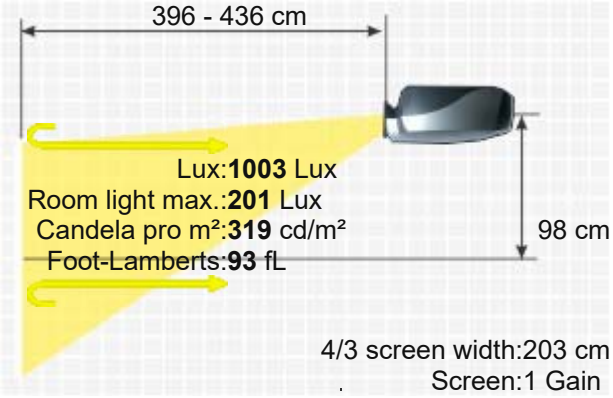

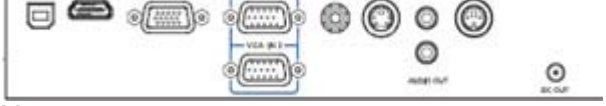

Ceiling Mounting	Yes
Power	355W
Size WxHxD	269 x 84 x 206 mm (10,6"x3,3"x8,1") 4,65 L/dm³
Operating Noise	34 / 31 dB in Eco Mode

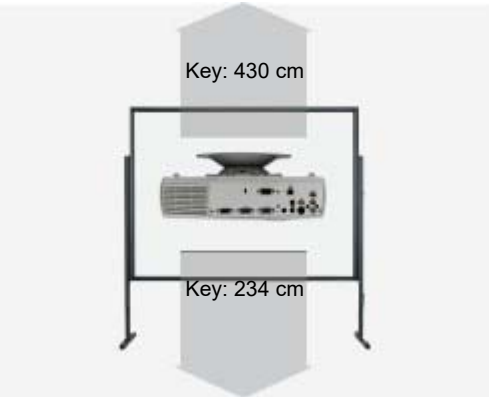

Weight	2,48 kg / 5,47 lbs.
Keystone	Vert.: +/-40°
Illumination	90%
Frequenz	H-sync: 30-100 kHz V-sync: 50-120 Hz
Foot-Lamberts	93 fL / max. 485 cm screen width 319 cd/m²

Features

- Full HD 1080P compatible
- Freeze
- Blackboard Modus
- Eco Mode
- Kensington Slot
- sRGB
- Gamma correction
- Password protection
- BrilliantColor™
- Remote control with laser pointer
- UNISHAPE™
- 2x digital zoom
- 6-segment colour wheel

Optional

Bulb only	NLMP19678
Lamp ruby	Ruby-LMP19678
Lamp original	EC.K1700.001
Compatible lamp	LMP-K19677
Remote original	MC.JMV11.00G
Remote control original	MC.JK211.007 / VZ.J5300.005 / VZ.J5600.002
Ceiling Mount 100-120	Halterung100

Order here: https://www.hcinema.de/lampen/shop-en.php?id=n19677

Status: 2010 Discontinued (EOL) // Last update of the data: 2023-08-04

Data



More Details

HCinema

https://www.projector-database.com/pro/acerp1203-en.html

Due to our ongoing commitment to continuously improve the quality of our projector database, this brochure is also subject to change without notice. HCinema is not responsible for any errors or omissions contained in product descriptions.