Acer P1357WI

EAN/UPC:MR.JUP11.001



Brief Introduction Beta 2.5	The standard portable P1357WI DLP projector from Acer has 4500 Ansi lumens, a contrast of 20000:1 and a WXGA 1280 x 800 resolution. An image width of up to 682 cm is possible as the projector has 4500 Ansi lumens. The projector can create rooms with residual light with a smaller image width, we recommend a maximum of 455 cm. As the projector recognizes Ezcast, Miracast Screen Mirroring signals, it is possible to play videos with a high resolution and surround sound directly from a smartphone, tablet, PC (Android, Windows and iOS) via WLAN. The model is also Full HD 1080P compatible. This model is no longer offered by Acer, but is still very popular in our projector database.
Display Type	1 x DLP Chip WXGA 16/10 Ti Digital Light Processing Chip
Ansi-Lumen	Projector: 4500 / Screen: 1800 Lux (bei 200 cm Screen)
Contrast	Projector: 20000:1 full on/off / Screen: 20000:1 full on/off
Black Level	Projector: 0,2250 min. Lumen / Screen: 0.09 min. Lumen
Offset	-
Resolution	WXGA 1280 x 800 1.024.000 Pixel WUXGA 1920 x 1200 compressed
Video Modes	Pal, SECAM, NTSC, HDTV 720p, 1080i, 1080p, EDTV 480p, 576p
Application	Standard-Portabel | External training and company presentations, as well as product presentations. Wide screen width or rooms with plenty of light (over 200 lumens).
Light Source	UHP 203W Lamp
Light Life	-
Operating Costs	-
Focus	Manual
Zoom	Manual 2x Digital
Objective	F=2,59 f=16,88-21,88 mm
Throw Ratio	1,21-1,57:1
Audio	1 x 10W Mono
Connections	2x HDMI in Composite-Video DVI in D-sub 15pin in und out S-Video in Mini Jack Audio in und out

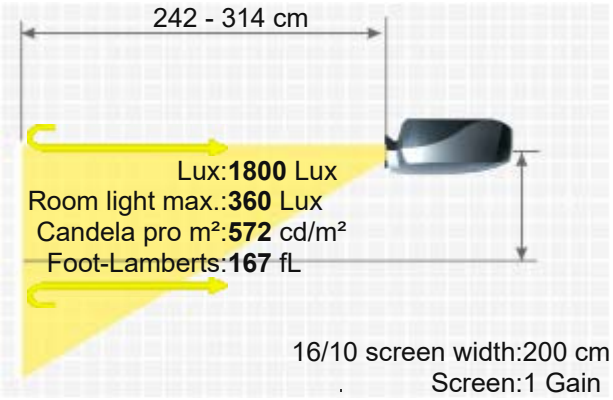

ACER P1357WI

USB in
RS232C Din 9 pin in



Ceiling Mounting	Yes
Power	260W
Size WxHxD	299,5 x 105,1 x 220 mm (11,8"x4,1"x8,7") 6,91 L/dm³
Operating Noise	-

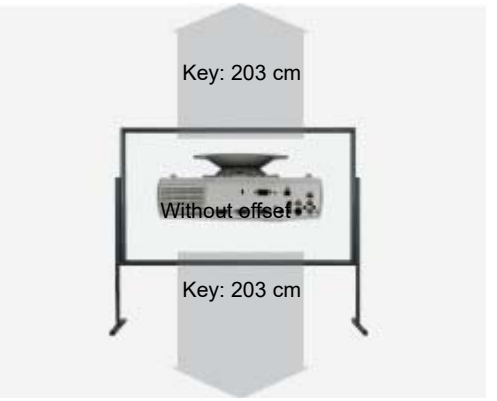

Weight	2,40 kg / 4,41 lbs.
Keystone	Vert.: +/-40°
Illumination	-
Frequenz	H-sync: 15-100 kHz V-sync: 24-120 Hz
Foot-Lamberts	167 fL / max. 682 cm screen width 572 cd/m²
Features	■ Full HD 1080P compatible ■ 24/7 continuous operation capable ■ Wi-Fi network compatible. ■ Acer BluelightShield ■ Acer LumiSense
Status	2021 Discontinued (EOL) // Last update of the data: 2024-08-21
Data	



More Details

https://www.projector-database.com/pro/acerp1357wi-en.html

Due to our ongoing commitment to continuously improve the quality of our projector database, this brochure is also subject to change without notice. HCinema is not responsible for any errors or omissions contained in product descriptions.