Aopen QH11



AOPEN QH11

Brief Introduction Beta 2.5	The Aopen QH11 LED LCD projector has 200 Ansi lumens, a contrast of 1000:1 and an HDTV 1280 x 720 resolution. Thanks to the LEDs, the projector has a light life of up to 50,000 hours, which is over 34.2 years if enjoyed for four hours a day. The projector also offers an integrated media player that can be used to play files directly. As the projector has horizontal and vertical keystone correction, the projector can be set up with plenty of free space in the room. Thanks to the brightness of 200 Ansi lumens, a picture width of 144 cm is possible. In room light, the image should be max. 96 cm wide. Playing 1080P is also no problem for the projector.
Display Type	1 x LCD Panel HDTV 16/9 Liquid Crystal Display
Projector: Ansi-Lumen	200
Projector: Contrast	1000:1 full on/off
Projector: Black Level Offset	0,2000 min. Lumen
Screen	89 Lux (200 cm Screen width) 1000:1 full on/off 0,089 min. Lumen
Resolution	HDTV 1280 x 720 921.600 Pixel HDTV 1920 x 1080 compressed
Video Modes	Pal, SECAM, NTSC, HDTV 720p, 1080i, 1080p, EDTV 480p, 576p **Media player formats:** Mediaplayer
Application	Game-Portabel | Very portable, small-screen projections. Very narrow picture width and rooms with very little light.
Light Source	LED
Light Life	50000 h.
Operating Costs	0,00 € LED
Focus	Manual
Zoom	No Zoom
Objective	-
Throw Ratio	1,5:1
Audio	1 x 5W
Connections	Input: 1 x HDMI (Video, Audio, HDCP) 1 x SD (SDHC) 1 x USB (Wireless Dongle, Type A) 1 x USB (Type A) Output:

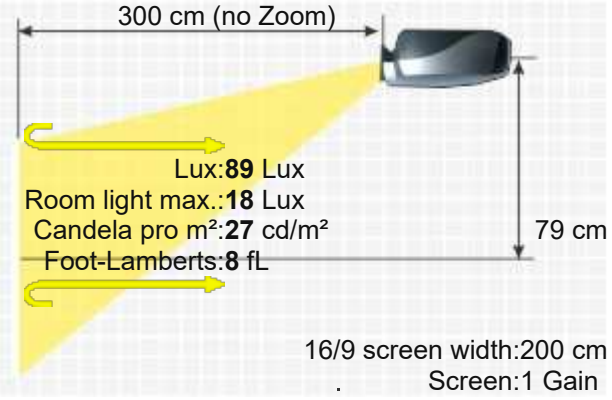

1 x DC Out (5V/0.5A, USB Type A)
1 x Headphone Out (Stereo Mini Jack)



Ceiling Mounting	Yes, is possible.
Power	-
Size WxHxD	232 x 92 x 168 mm (9,1"x3,6"x6,6") 3,59 L/dm³
Operating Noise	33dB

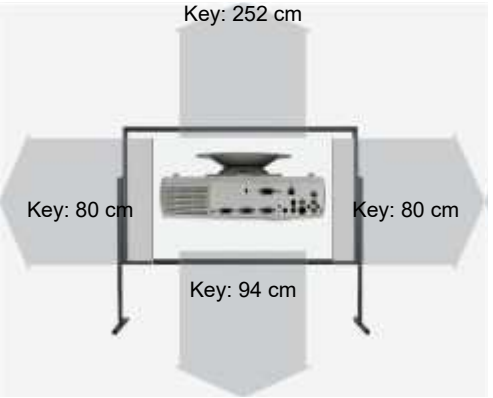

Weight	1,30 kg / 2,2 lbs.
Keystone	Vert.: +/-30° automatisch Hori.: +/-15°
Illumination	-
Frequenz	-
Foot-Lamberts	8 fL / max. 144 cm screen width 27 cd/m²
Features	■ Full HD 1080P compatible ■ Integrated Mediaplayer ■ Automatic and manual vertical keystone correction ■ Wi-Fi network compatible. ■ Wireless dongle (included with purchase)
Screen Mirroring	Optional only Chromecast / Fire TV / Apple TV / Mi Box Ads
Status	2020 Discontinued (EOL) // Last update of the data: 2026-05-05

Data



More Details

HCinema
https://www.projector-database.com/pro/acerqh11-en.html

Due to our ongoing commitment to continuously improve the quality of our projector database, this brochure is also subject to change without notice. HCinema is not responsible for any errors or omissions contained in product descriptions.