Acer S1210



ACER S1210

Brief Introduction Beta 2.5	The S1210 3D BrilliantColor DLP has 2500 Ansi lumens, a contrast of 4000:1 and an XGA 1024 x 768 resolution. The lamp life is specified by the manufacturer as 4500 hours, which is over 6.2 years with a daily viewing time of 2 hours. This projector has a projection ratio of just 0.61:1. For a 2 m wide image, the projector only needs to be 122 cm away from the screen. It is also Full HD 1080P compatible. On the market since 2012, the model is no longer offered by the manufacturer Acer.
Display Type	1 x 0,55" DC3 DLP Chip XGA 4/3 Ti Digital Light Processing Chip
Ansi-Lumen	Projector: 2500 / 2000 im Eco Mode — Screen: 833 Lux (bei 200 cm Screen)
Contrast	Projector: 4000:1 full on/off — Screen: 4000:1 full on/off
Black Level Offset	Projector: 0,6250 min. Lumen — Screen: 0,208 min. Lumen
Resolution	XGA 1024 x 768 786.432 Pixel UXGA 1600 x 1200 compressed
Video Modes	PAL, SECAM, NTSC, HDTV 720p, 1080i, 1080p EDTV 480p, 576p
Disc Recognition	DVD | HD Blu-ray (komprimiert) | ~~3D Blu-ray~~ | ~~4K UHD Blu-ray~~
3D Compatibility	Frame Sequential (3D Ready)
Application	Short Distance | Medium screen width or rooms with little light, max. 100 lumens.
Light Source	190W UHP Lamp Articel Nr.: EC.JDW00.001
Light Life	4500 h. 6000 h. in Eco Mode
Operating Costs	-
Focus	Manual
Zoom	No Zoom
Objective	F=2,6 f=6,90mm
Throw Ratio	0,61:1
Audio	1 x 2W Mono
Connections	D-sub 15 pin in 1 x out S-Video in Cinch Video in Mini Jack Audio in und out USB Typ B RS232C

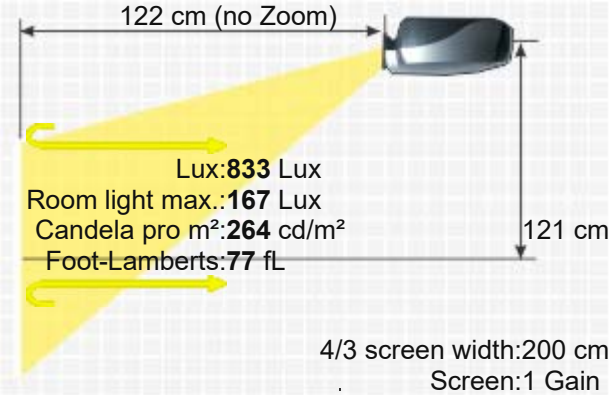



Ceiling Mounting	Yes
Power	291W
Size WxHxD	272 x 104 x 229 mm (10,7"x4,1"x9") 6,48 L/dm³
Operating Noise	31 / 26 dB in Eco Mode



Weight	2,70 kg / 5,95 lbs.
Keystone	Vert.: +/-40°
Illumination	85%
Frequenz	H-sync: 30-100 kHz V-sync: 50-120 Hz
Foot-Lamberts	77 fL / max. 435 cm screen width 264 cd/m²

Features

- Full HD 1080P compatible
- Blackboard Modus
- Eco Mode
- Kensington Slot
- sRGB
- BrilliantColor™
- Short-throw projector
- UNISHAPE™
- 6-segment colour wheel
- 2x digital zoom

Optional

Remote control original	VZ.JDW00.001
Lamp original	EC.JDW00.001

Order here: https://www.hcinema.de/lampen/shop-en.php?id=fro20949

Status: 2012 Discontinued (EOL) // Last update of the data: 2023-08-04

Data



More Details

https://www.projector-database.com/pro/acers1210-en.html

Due to our ongoing commitment to continuously improve the quality of our projector database, this brochure is also subject to change without notice. HCinema is not responsible for any errors or omissions contained in product descriptions.