Acer S1270Hn



Display Type	1 x DLP Chip WXGA 16/10 Ti Digital Light Processing Chip	
Ansi-Lumen	Projector -	Screen Lux (bei 200 cm Screen)
Contrast	-	-
Black Level	-	-
Offset	-	
Resolution	WXGA 1280 x 800 1.024.000 Pixel UXGA 1600 x 1200 compressed	
Video Modes	Pal, SECAM, NTSC, HDTV 720p, 1080i, 1080p EDTV 480p, 576p	
Disc Recognition	DVD | HD Blu-ray (komprimiert) | ~~3D Blu-ray~~ | ~~4K UHD Blu-ray~~	
3D Compatibility	Frame Sequential (3D Ready)	
Application	Short Distance | Very narrow picture width and rooms with very little light.	
Light Source	190W Lamp Articel Nr.: MC.JF711.001	
Light Life	5000 h.	
Operating Costs	-	
Focus	Manual	
Zoom	No Zoom	
Objective	F=2,8 f=7,35mm	
Throw Ratio	0,52:1	
Audio	2W	
Connections	HDMI in 2 x D-sub 15 pin in 1 x out S-Video in Cinch Video in USB in RS232C Mini Jack Audio in und out RJ45 in	
Ceiling Mounting	-	
Power	235W	
Size WxHxD	288 x 83,3 x 225 mm (11,3"x3,3"x8,9") 5,38 L/dm³	
Operating Noise	-	
Weight	2,40 kg / 5,29 lbs.	
Keystone	Vert.: +/-40°	
Illumination	-	
Frequenz	H-sync: 30-100 kHz V-sync: 50-85 Hz	
Foot-Lamberts	- -	

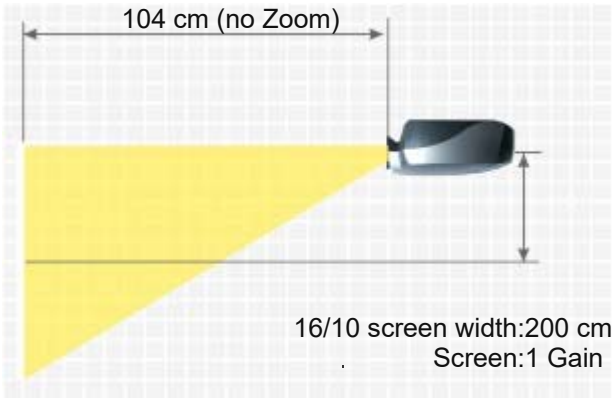

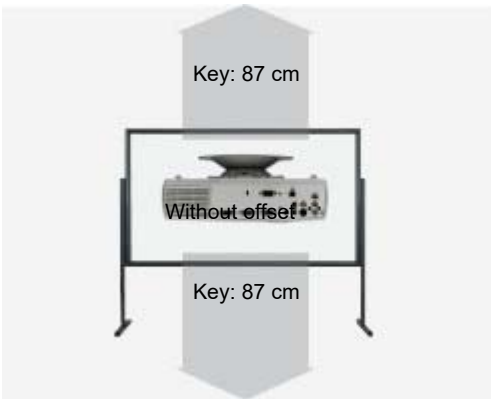

Features	■ Full HD 1080P compatible ■ Lan network compatible. ■ Short-throw projector ■ Digital Zoom 2X
Status Data	2012 Discontinued (EOL) // Last update of the data: 2023-08-04
More Details	https://www.projector-database.com/pro/acers1270hn-en.html

Due to our ongoing commitment to continuously improve the quality of our projector database, this brochure is also subject to change without notice. HCinema is not responsible for any errors or omissions contained in product descriptions.