ACTO AT 739



Brief Introduction Beta 2.5	A brief introduction to the AT 739: The ACTO LCD projector offers 1800 Ansi lumens, a contrast of 350:1 and an XGA 1024 x 768 resolution. The lamp life is specified by the manufacturer as 4000 hours, which is over 5.5 years with a daily viewing time of 2 hours. Due to the brightness of 1800 Ansi lumens, a picture width of 369 cm is possible. In room light, the picture should be max. 246 cm wide. This model is no longer offered by ACTO.
Display Type	LCD TFT Panel XGA 4/3 Liquid Crystal Display
Ansi-Lumen	Projector: 1800 / Screen: 582 Lux (bei 203 cm Screen)
Contrast	Projector: 350:1 full on/off / Screen: 350:1 full on/off
Black Level	Projector: 5,1429 min. Lumen / Screen: 1.678 min. Lumen
Offset	-
Resolution	XGA 1024 x 768 786.432 Pixel SXGA 1280 x 1024 compressed
Video Modes	PAL/SECAM/NTSC/NTSC 4.43
Application	Standard-Portabel | External training and company presentations, as well as product presentations. Small screen width, rooms with very little ambient light below 100 lumens.
Light Source	- Lamp
Light Life	4000 h.
Operating Costs	-
Focus	-
Zoom	-
Objective	F=2,5 f=47-65 mm
Throw Ratio	-
Audio	-
Connections	-
Ceiling Mounting	-
Power	-
Size WxHxD	-
Operating Noise	-
Weight	3,20 kg / 7,05 lbs.
Keystone	-
Illumination	-
Frequenz	-
Foot-Lamberts	54 fL / max. 369 cm screen width 185 cd/m²
Features	-
Status	- Discontinued (EOL) // Last update of the data: 2023-10-26
Data	

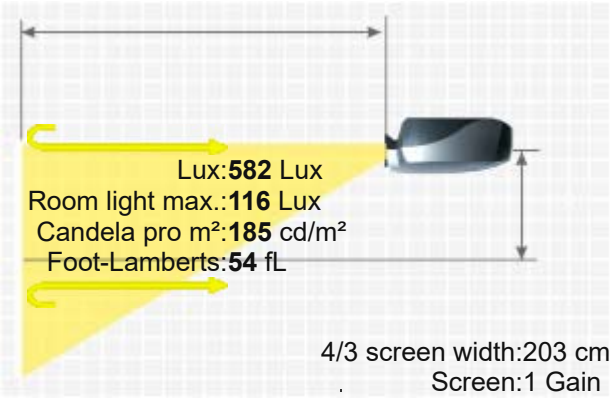

More Details

HCinema

https://www.projector-database.com/pro/actoat739-en.html

Due to our ongoing commitment to continuously improve the quality of our projector database, this brochure is also subject to change without notice. HCinema is not responsible for any errors or omissions contained in product descriptions.