ACTO LX222ST



3LCD Kurzdistanz

Brief Introduction Beta 2.5	With the LX222ST, manufacturer ACTO offers a standard portable LCD projector with XGA 1024 x 768 resolution and a contrast of 3200:1. The lamp in the projector is specified with a lamp life of 4000 hours, which is over 5.5 years if enjoyed for two hours every day. 485 cm image width, the projector will be able to illuminate well. However, if room light is available, the picture width should ideally not exceed 323 cm. The model is also Full HD 1080P compatible. The model was built by ACTO in 2012 and is no longer current.
Display Type	3 x 0,63" LCD TFT Panel XGA 4/3 Liquid Crystal Display
Projector: Ansi-Lumen	3100
Projector: Contrast	3200:1 full on/off
Projector: Black Level	0,9688 min. Lumen
Projector: Offset	-
Screen	1033 Lux (bei 200 cm Screen) 3200:1 full on/off 0,323 min. Lumen
Resolution	XGA 1024 x 768 786.432 Pixel UXGA 1600 x 1200 compressed
Video Modes	Pal, SECAM, NTSC, HDTV 720p, 1080i, 1080p EDTV 480p, 576p
Application	Standard-Portabel | External training and company presentations, as well as product presentations. Medium screen width or rooms with a little more ambient light, max. 200 lumens.
Light Source	230W Lamp
Light Life	4000 h. 5000 h. in Eco Mode
Operating Costs	-
Focus	Manual
Zoom	No Zoom
Objective	F=1,8 f=9,02mm
Throw Ratio	0,7:1
Audio	2 x 3W
Connections	D-sub 15pin in und out Cinch Video in Cinch Stereo in S-Video in RS232C Din 9 pin in
Ceiling Mounting	Yes
Power	280W
Size WxHxD	361,5 x 92 x 314,2 mm (14,2"x3,6"x12,4") 10,43 L/dm³
Operating Noise	-
Weight	3,70 kg / 8,16 lbs.
Keystone	-
Illumination	85%
Frequenz	H-sync: 15-100 kHz V-sync: 48,120 Hz
Foot-Lamberts	96 fL / max. 485 cm screen width

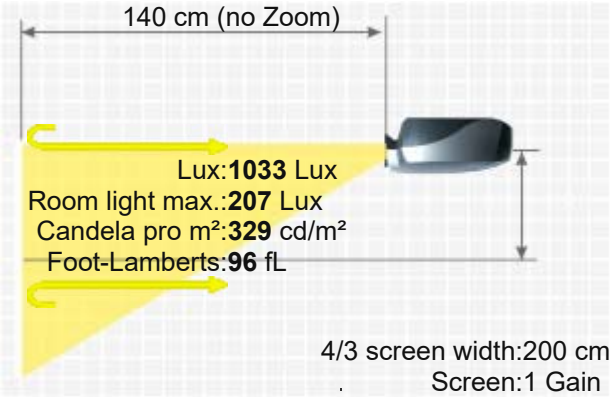

ACTO LX222ST

	329 cd/m²
Features	■ Full HD 1080P compatible ■ Eco Mode ■ Short-throw projector
Status	2012 Discontinued (EOL) // Last update of the data: 2023-08-04
Data	
More Details	https://www.projector-database.com/pro/actolx222st-en.html

Due to our ongoing commitment to continuously improve the quality of our projector database, this brochure is also subject to change without notice. HCinema is not responsible for any errors or omissions contained in product descriptions.