Ampro 4200G



Display Type	 9 Zoll Röhren 4/3		
Ansi-Lumen	Projector 250 / 1000 peak white	Screen	81 Lux (bei 203 cm Screen)
Contrast	-		-
Black Level	-		-
Offset	-		
Resolution	-		
Video Modes	PA17SECAM/NTSC 3.58 NTSC 4.43		
Application	CRT Projection | Very narrow picture width and rooms with very little light.		
Light Source	CRT Röhre		
Light Life	ca. 10000 - 20000 h. (je nach Anwendung)		
Operating Costs	-		
Focus	Manual		
Zoom	No Zoom		
Objective	-		
Throw Ratio	-		
Audio	-		
Connections	-		
Ceiling Mounting	-		
Power	-		
Size WxHxD	-		
Operating Noise	-		

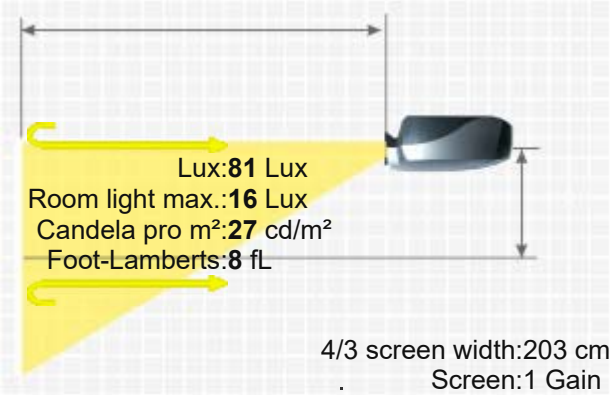

Weight	-
Keystone	-
Illumination	-
Frequenz	H-sync: 15-85 kHz V-sync: 40-150 Hz
Foot-Lamberts	8 fL / max. 138 cm screen width 27 cd/m²
Features	-
Status	1998 Discontinued (EOL) // Last update of the data: 2023-08-04
Data	

More Details

HCinema

https://www.projector-database.com/pro/ampro4200G-en.html

Due to our ongoing commitment to continuously improve the quality of our projector database, this brochure is also subject to change without notice. HCinema is not responsible for any errors or omissions contained in product descriptions.

AMPRO 4200G