# Apin Rainbow RB330



LED USB

| | | | |
|---|---|---|---|
| Display Type | Lcos Panel<br>VGA 4/3 Liquid Crystal on Silicon (LCOS) | | |
| Ansi-Lumen | Projector 9 | Screen | 3 Lux (bei 200 cm Screen) |
| Contrast | - | | - |
| Black Level | - | | - |
| Offset | - | | |
| Resolution | VGA 640 x 480<br>307.200 Pixel | | |
| Video Modes | PAL, SECAM, NTSC, HDTV 720p, 1080i, EDTV 480p, 576p | | |
| Application | Game-Portabel \| Very portable, small-screen projections.<br>Very narrow picture width and rooms with very little light. | | |
| Light Source | LED | | |
| Light Life | 20000 h. | | |
| Operating Costs | 0,00 € LED | | |
| Focus | Manual | | |
| Zoom | No Zoom | | |
| Objective | - | | |
| Throw Ratio | - | | |
| Audio | - | | |
| Connections | USB | | |
| Ceiling Mounting | - | | |
| Power | - | | |
| Size WxHxD | 103 x 26 x 62 mm (4,1"x1"x2,4") 0,17 L/dm³ | | |
| Operating Noise | - | | |

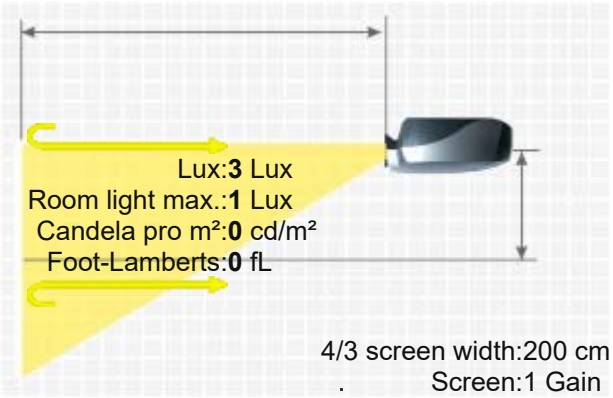


| | |
|---|---|
| Weight | - |
| Keystone | - |
| Illumination | - |
| Frequenz | - |
| Foot-Lamberts | - |
| | - |
| Features | - |
| Status | 2010 Discontinued (EOL) // Last update of the data: 2023-08-04 |
| Data | |

More Details

HCinema

https://www.projector-database.com/pro/apinrainbowrb330-en.html

APIN RAINBOW RB330

Due to our ongoing commitment to continuously improve the quality of our projector database, this brochure is also subject to change without notice. HCinema is not responsible for any errors or omissions contained in product descriptions.