Apollo VP 820



Brief Introduction Beta 2.5	A brief introduction to the Apollo VP 820. The stationary LCD projector has an SVGA 800 x 600 resolution and a contrast of 200:1. An image width of up to 195 cm is possible. However, the image should be smaller in room light. We recommend max. 130 cm. This model is no longer offered by Apollo.
Display Type	3 x LCD TFT Panel SVGA 4/3 Liquid Crystal Display
Projector Ansi-Lumen	500
Contrast	200:1 full on/off
Black Level	2,5000 min. Lumen
Offset	-
Screen	162 Lux (bei 203 cm Screen) 200:1 full on/off 0.823 min. Lumen
Resolution	SVGA 800 x 600 480.000 Pixel XGA 1024 x 768 compressed
Video Modes	NTSC, PAL, SECAM
Application	Stationär | Permanent installation in the training room and meeting room as well as the conference room. Very narrow picture width and rooms with very little light.
Light Source	Metalldampf Lamp Articel Nr.: LMPf527
Light Life	1000 h.
Operating Costs	-
Focus	Manual
Zoom	Manual
Objective	-
Throw Ratio	-
Audio	-
Connections	Cinch Video in S-Video in
Ceiling Mounting	-
Power	-
Size WxHxD	-
Operating Noise	-
Weight	-
Keystone	-
Illumination	-
Frequenz	-
Foot-Lamberts	15 fL / max. 195 cm screen width 51 cd/m²
Features	-
Status	- Discontinued (EOL) // Last update of the data: 2023-08-04
Data	

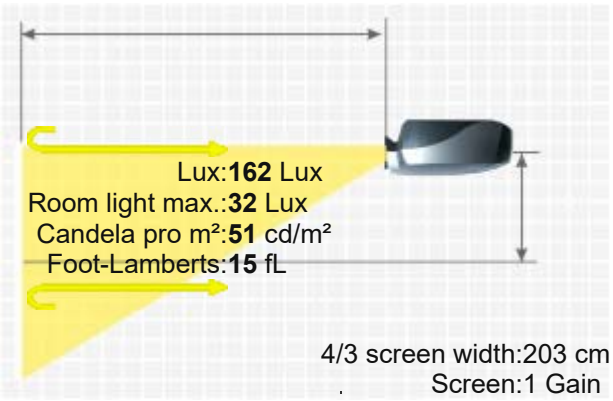

APOLLO VP 820

More Details

HCinema

https://www.projector-database.com/pro/apollovp820-en.html

Due to our ongoing commitment to continuously improve the quality of our projector database, this brochure is also subject to change without notice. HCinema is not responsible for any errors or omissions contained in product descriptions.