# Artograph Digital Art LED2000



Media Player LED

| | | | |
|---|---|---|---|
| Brief Introduction<br>Beta 2.5 | With the Digital Art LED2000, manufacturer Artograph offers a game-portable LED projector with SVGA 800 x 600 resolution and a contrast of 2000:1. Manufacturer Artograph specifies a service life of 30,000 hours, which is over 20.5 years with a daily viewing time of 4 hours. The projector is equipped with an integrated media player, so direct playback of files will not be a problem. 200 Ansi lumens ensure that a picture width of 123 cm is also possible. However, if room light is available, the picture should be a maximum of 82 cm wide. On the market since 2011, the model is no longer offered by the manufacturer Artograph. | | |
| Display Type | [redacted] - | | |
| Ansi-Lumen | Projector: 200 | Screen: 67 Lux (bei 200 cm Screen) | |
| Contrast | Projector: 2000:1 full on/off | Screen: 2000:1 full on/off | |
| Black Level | Projector: 0,1000 min. Lumen | Screen: 0,034 min. Lumen | |
| Offset | - | | |
| Resolution | SVGA 800 x 600<br>480.000 Pixel | | |
| Video Modes | PAL, SECAM, NTSC, HDTV 720p, 1080i, EDTV 480p, 576p<br>**Media player formats:** AVI, m4v, Divx, MPEG1, and MPEG2 MP3 | | |
| Application | Game-Portabel \| Very portable, small-screen projections.<br>Very narrow picture width and rooms with very little light. | | |
| Light Source | LED | | |
| Light Life | 30000 h. | | |
| Operating Costs | 0,00 € LED | | |
| Focus | Manual | | |
| Zoom | No Zoom | | |
| Objective | - | | |
| Throw Ratio | - | | |
| Audio | - | | |
| Connections | HDMI in | | |
| Ceiling Mounting | - | | |
| Power | - | | |
| Size WxHxD | - | | |
| Operating Noise | - | | |
| Weight | 0,800 kg / 1,76 lbs. | | |
| Keystone | - | | |
| Illumination | - | | |
| Frequenz | - | | |
| Foot-Lamberts | 6 fL / max. 123 cm screen width<br>21 cd/m² | | |
| Features | ■ Integrated Mediaplayer<br>■ Freeze<br>■ Blank (Black screen button) | | |

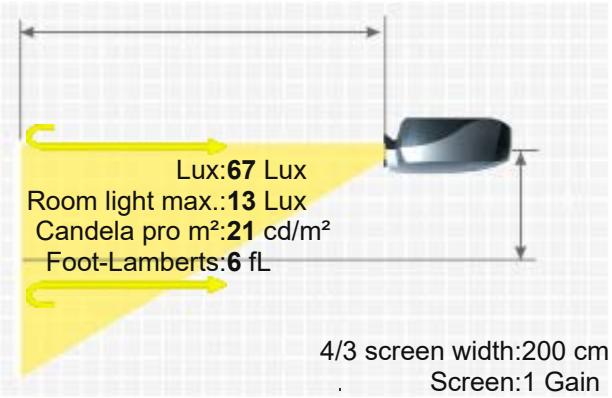


ARTOGRAPH DIGITAL ART LED2000

■ Gamma correction

Status 2011 Discontinued (EOL) // Last update of the data: 2023-08-04

Data

More Details

https://www.projector-database.com/pro/artographdigitalartled2000-en.html

Due to our ongoing commitment to continuously improve the quality of our projector database, this brochure is also subject to change without notice. HCinema is not responsible for any errors or omissions contained in product descriptions.