ASK Impression 750



Mikro

Brief Introduction Beta 2.5	A brief introduction to the ASK Impression 750. The LCD projector has a VGA 640 x 480 resolution and a contrast of 100:1. An image width of up to 131 cm is possible. However, the image should be smaller in room light. We recommend max. 87 cm. This model is no longer offered by ASK.
Display Type	1 x 8,4" LCD TFT Panel VGA 4/3 Liquid Crystal Display
Projector Ansi-Lumen	225
Contrast	100:1 full on/off
Black Level	2,2500 min. Lumen
Offset	-
Resolution	VGA 640 x 480 307.200 Pixel
Video Modes	PAL, PAL M, PAL N, SECAM, NTSC 3.58/4.43
Application	Stationary | Permanent installation in the training room and meeting room as well as the conference room. Very narrow picture width and rooms with very little light.
Light Source	400W Halogen Lamp
Light Life	-
Operating Costs	-
Focus	Manual
Zoom	No Zoom
Objective	-
Throw Ratio	-
Audio	2 x 5W
Connections	S-Video in Cinch Video in Mini jack in D-sub 15pin in Mikrofon in
Ceiling Mounting	-
Power	-
Size WxHxD	322 x 245 x 638 mm (12,7"x9,6"x25,1") 50,33 L/dm³
Operating Noise	-
Weight	-
Keystone	-
Illumination	-
Frequenz	-
Foot-Lamberts	7 fL / max. 131 cm screen width 24 cd/m²
Features	■ Freeze ■ Remote control with mouse control
Status	- Discontinued (EOL) // Last update of the data: 2023-08-04

Screen
73 Lux (bei 203 cm Screen)
100:1 full on/off
0.753 min. Lumen

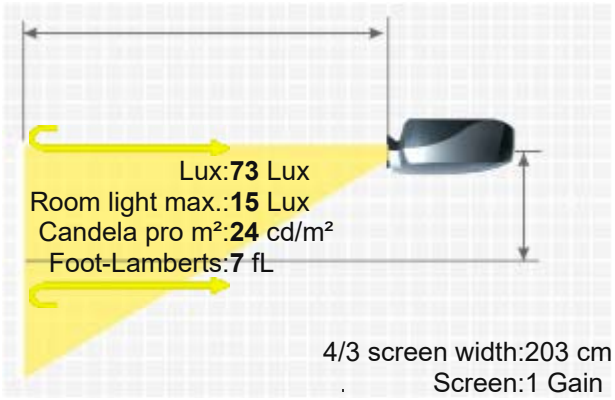

ASK IMPRESSION 750

Data

More Details



HCinema
https://www.projector-database.com/pro/askimpression750-en.html

Due to our ongoing commitment to continuously improve the quality of our projector database, this brochure is also subject to change without notice. HCinema is not responsible for any errors or omissions contained in product descriptions.