ASK Impression A4



Brief Introduction Beta 2.5	A brief introduction to the Impression A4: The ASK standard portable LCD projector offers 500 Ansi lumens, a contrast of 300:1 and an SVGA 800 x 600 resolution. An image width of up to 195 cm is possible as the projector has 500 Ansi lumens. However, if room light is available, the picture should be max. 130 cm wide. This model is no longer available from ASK.
Display Type	3 x 1,3" LCD TFT Panel mit MLA SVGA 4/3 Liquid Crystal Display with Micro Lense Array
Ansi-Lumen	Projector: 500 / Screen: 162 Lux (bei 203 cm Screen)
Contrast	Projector: 300:1 full on/off / Screen: 300:1 full on/off
Black Level	Projector: 1,6667 min. Lumen / Screen: 0.546 min. Lumen
Offset	-
Resolution	SVGA 800 x 600 480.000 Pixel XGA 1024 x 768 compressed
Video Modes	NTSC, PAL, SECAM
Application	Standard-Portabel | External training and company presentations, as well as product presentations. Very narrow picture width and rooms with very little light.
Light Source	150W Metalldampf Lamp Articel Nr.: 403313 / LAMP-005
Light Life	2500 h.
Operating Costs	-
Focus	Manual
Zoom	Manual 1,3
Objective	-
Throw Ratio	-
Audio	2 x 1W
Connections	S-Video in Cinch Stereo in Cinch Video in Maus in Mini jack in D-sub 15pin in und out
Ceiling Mounting	Yes
Power	250W
Size WxHxD	-
Operating Noise	38dB
Weight	-
Keystone	-
Illumination	-
Frequenz	H-sync: 14-100 kHz V-sync: 50-130 Hz Range max.: 150 MHz
Foot-Lamberts	15 fL / max. 195 cm screen width 51 cd/m²

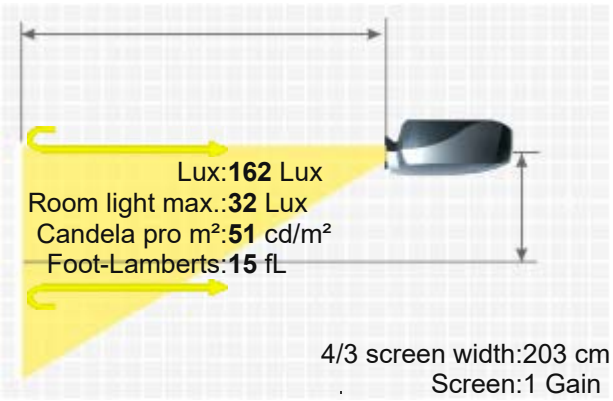

ASK IMPRESSION A4

Features	■ Freeze ■ Remote control with mouse control ■
Status Data	- Discontinued (EOL) // Last update of the data: 2023-08-04
More Details	https://www.projector-database.com/pro/askimpressiona4-en.html

Due to our ongoing commitment to continuously improve the quality of our projector database, this brochure is also subject to change without notice. HCinema is not responsible for any errors or omissions contained in product descriptions.