ASK Proxima S3350W



3LCD Kurzdistanz

The S3350W LCD projector from ASK Proxima has 3500 Ansi lumens, a contrast of 4000:1 and a WXGA 1280 x 800 resolution. The lamp life is specified by the manufacturer as 4000 hours, which is over 5.5 years with a daily viewing time of 2 hours. Thanks to the short-throw projection ratio of just 0.48:1, the projector does not stand still in the room. For a 2m wide image, the projector only needs to be 96 cm away from the screen. The model was built by ASK Proxima in 2012 and is no longer current.

Brief Introduction
Beta 2.5

Display Type	3 x 0,59" LCD TFT Panel WXGA 16/10 Liquid Crystal Display	
	Projector	Screen
Ansi-Lumen	3500	1400 Lux (bei 200 cm Screen)
Contrast	4000:1 full on/off	4000:1 full on/off
Black Level	0,8750 min. Lumen	0,35 min. Lumen
Offset	-	
Resolution	WXGA 1280 x 800 1.024.000 Pixel UXGA 1600 x 1200 compressed	
Video Modes	Pal, SECAM, NTSC, HDTV 720p, 1080i, EDTV 480p, 576p	
Disc Recognition	DVD | HD Blu-ray (komprimiert) | ~~3D Blu-ray~~ | ~~4K UHD Blu-ray~~	
Application	Short Distance | Medium screen width or rooms with a little more ambient light, max. 200 lumens.	
Light Source	215W UHP Lamp	
Light Life	4000 h. 6000 h. in Eco Mode	
Operating Costs	-	
Focus	Manual	
Zoom	No Zoom	
Objective	F=1,8 f=6,07mm	
Throw Ratio	0,48:1	
Audio	-	
Connections	HDMI in 2 x D-sub 15pin in 1 x out Cinch Video in Cinch Stereo in S-Video in Mini Jack Audio in und out RS232C Din 9 pin in	
Ceiling Mounting	Yes	
Power	280W	
Size WxHxD	403 x 144 x 327 mm (15,9"x5,7"x12,9") 18,98 L/dm³	
Operating Noise	34 / 29 dB in Eco Mode	
Weight	4,10 kg / 9,04 lbs.	
Keystone	-	
Illumination	85%	

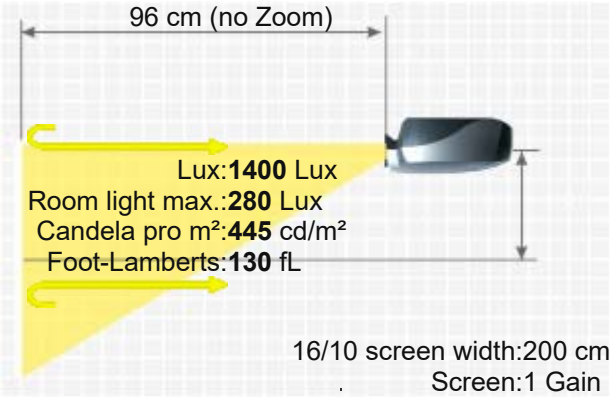

ASK PROXIMA S3350W

Frequenz	H-sync: 15-100 kHz V-sync: 48-85 Hz
Foot-Lamberts	130 fL / max. 601 cm screen width
	445 cd/m²
Features	■ Eco Mode ■ Short-throw projector
Status	2012 Discontinued (EOL) // Last update of the data: 2023-08-04
Data	
More Details	https://www.projector-database.com/pro/askproximas3350w-en.html

Due to our ongoing commitment to continuously improve the quality of our projector database, this brochure is also subject to change without notice. HCinema is not responsible for any errors or omissions contained in product descriptions.