Avio iP 03P



Brief Introduction Beta 2.5	A brief introduction to the Avio iP 03P. The DLP projector has an XGA 1024 x 768 resolution and a contrast of 1500:1. Horizontal and vertical keystone correction makes setting up the image childs play. An image width of up to 515 cm is possible as the projector has 3500 Ansi lumens. The projector can create rooms with residual light with a smaller image width, we recommend a maximum of 343 cm. The projector was launched in 2011 and is no longer sold by the manufacturer.
Display Type	 1 x 0,7" DLP Chip XGA 4/3 Ti Digital Light Processing Chip
Ansi-Lumen	Projector: 3500 / Screen: 1167 Lux (bei 200 cm Screen)
Contrast	Projector: 1500:1 full on/off / Screen: 1500:1 full on/off
Black Level	Projector: 2,3333 min. Lumen / Screen: 0,78 min. Lumen
Offset	-
Resolution	XGA 1024 x 768 786.432 Pixel UXGA 1600 x 1200 compressed
Video Modes	PAL, SECAM, NTSC, HDTV 720p, 1080i, EDTV 480p, 576p
Application	Standard-Portabel | External training and company presentations, as well as product presentations. Medium screen width or rooms with a little more ambient light, max. 200 lumens.
Light Source	280W Lamp
Light Life	-
Operating Costs	-
Focus	Manual
Zoom	Manual
Objective	-
Throw Ratio	-
Audio	5W Mono
Connections	D-sub 15 pin in S-Video in Cinch Video in Cinch Stereo in USB in
Ceiling Mounting	Nein
Power	400W
Size WxHxD	290 x 140 x 365 mm (11,4"x5,5"x14,4") 14,82 L/dm³
Operating Noise	-
Weight	4,70 kg / 10,36 lbs.
Keystone	Vert.: +/-15° Hori.: +/-40°
Illumination	-
Frequenz	H-sync: 24,8-91,1 kHz V-sync: 50-85 Hz
Foot-Lamberts	108 fL / max. 515 cm screen width 370 cd/m²

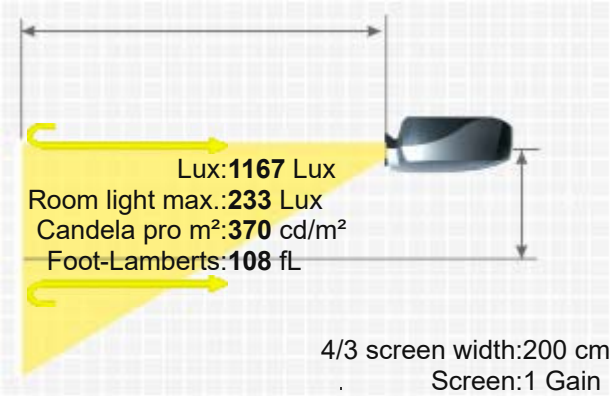

Features	BrilliantColor™
Status	2011 Discontinued (EOL) // Last update of the data: 2023-08-04
Data	

More Details

HCinema

https://www.projector-database.com/pro/avioip03p-en.html

Due to our ongoing commitment to continuously improve the quality of our projector database, this brochure is also subject to change without notice. HCinema is not responsible for any errors or omissions contained in product descriptions.