Avsion YS 700



Brief Introduction Beta 2.5	A brief introduction to the Avsion YS 700. The LCD projector has an XGA 1024 x 768 resolution and a contrast of 300:1. The manufacturer specifies a lamp life of 6000 hours, which is over 8.2 years if enjoyed for two hours a day. As Avsion specifies the brightness of the projector in lumens, we have calculated an approximate Ansi lumen value in this case. 870 Ansi lumens ensure that a picture width of 257 cm is also possible. However, if room light is available, the picture should be a maximum of 171 cm wide. This model is no longer offered by Avsion.
Display Type	LCD TFT Panel XGA 4/3 Liquid Crystal Display
Ansi-Lumen	Projector: 870 1000 Lumen / Screen: 281 Lux (bei 203 cm Screen)
Contrast	Projector: 300:1 full on/off / Screen: 300:1 full on/off
Black Level	Projector: 2,9000 min. Lumen / Screen: 0.946 min. Lumen
Offset	-
Resolution	XGA 1024 x 768 786.432 Pixel
Video Modes	PAL, SECAM, NTSC, HDTV 720p, 1080i, EDTV 480p, 576p
Application	Stationär | Permanent installation in the training room and meeting room as well as the conference room. Small screen width, rooms with very little ambient light below 100 lumens.
Light Source	-
Light Life	6000 h.
Operating Costs	-
Focus	-
Zoom	-
Objective	-
Throw Ratio	-
Audio	-
Connections	-
Ceiling Mounting	Yes
Power	-
Size WxHxD	310 x 122 x 390 mm (12,2"x4,8"x15,4") 14,75 L/dm³
Operating Noise	-
Weight	7,00 kg / 15,43 lbs.
Keystone	Vert.: +/-15°
Illumination	-
Frequenz	-
Foot-Lamberts	26 fL / max. 257 cm screen width 89 cd/m²
Features	-
Status	- Discontinued (EOL) // Last update of the data: 2024-06-04
Data	

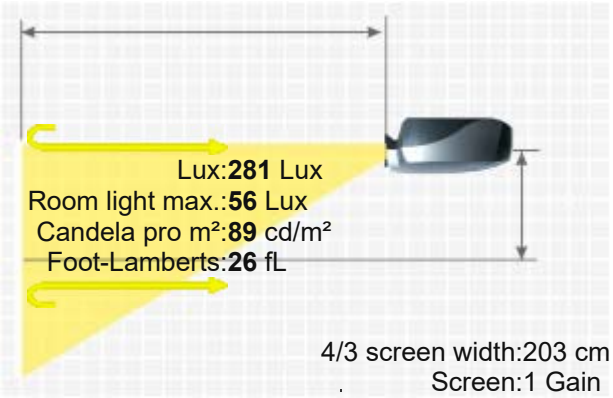

AVSION YS 700

More Details

HCinema

https://www.projector-database.com/pro/avisionys700-en.html

Due to our ongoing commitment to continuously improve the quality of our projector database, this brochure is also subject to change without notice. HCinema is not responsible for any errors or omissions contained in product descriptions.