Avsion YS 500



Brief Introduction Beta 2.5	The standard portable YS 500 LCD has 72 Ansi lumens and an XGA 1024 x 768 resolution. As Avsion specifies the brightness of the projector in lumens, we have calculated an approximate Ansi lumen value in this case. The projector will be able to illuminate a picture width of 74 cm well. However, if room light is available, the image width should ideally not exceed 49 cm. This model is no longer available from Avsion.
Display Type	LCD TFT Panel XGA 4/3 Liquid Crystal Display
Ansi-Lumen	Projector: 72 1200 Lumen / Screen: 24 Lux (bei 200 cm Screen)
Contrast	Projector: - / Screen: -
Black Level	Projector: - / Screen: -
Offset	-
Resolution	XGA 1024 x 768 786.432 Pixel
Video Modes	PAL, SECAM, NTSC, HDTV 720p, 1080i, EDTV 480p, 576p
Application	Standard-Portabel | External training and company presentations, as well as product presentations. Very narrow picture width and rooms with very little light.
Light Source	150W Lamp
Light Life	-
Operating Costs	-
Focus	-
Zoom	-
Objective	-
Throw Ratio	-
Audio	-
Connections	S-Video in Cinch Video in
Ceiling Mounting	-
Power	-
Size WxHxD	250 x 115 x 320 mm (9,8"x4,5"x12,6") 9,2 L/dm³
Operating Noise	-

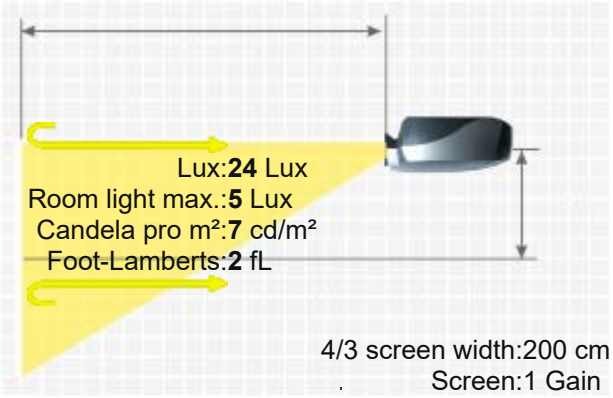

Weight	6,00 kg / 13,23 lbs.
Keystone	Vert.: +/-15°
Illumination	-
Frequenz	-
Foot-Lamberts	2 fL / max. 74 cm screen width 7 cd/m²
Features	-
Status	- Discontinued (EOL) // Last update of the data: 2024-06-04
Data	
More Details	https://www.projector-database.com/pro/avsionys500-en.html

AVSION YS 500

Due to our ongoing commitment to continuously improve the quality of our projector database, this brochure is also subject to change without notice. HCinema is not responsible for any errors or omissions contained in product descriptions.