Avsion YS 8000F



Brief Introduction Beta 2.5	With the YS 8000F, manufacturer Avsion offers a stationary LCD projector with XGA 1024 x 768 resolution and a contrast of 350:1. The lamp life is specified by the manufacturer as 6000 hours, which converts to over 8.2 years at 2 hours per day. 2500 Ansi lumens ensure that a picture width of 435 cm is also possible. However, if room light is available, the picture should be max. 290 cm wide. It is no longer offered by the manufacturer Avsion.
Display Type	1 x LCD TFT Panel XGA 4/3 Liquid Crystal Display
Projector Ansi-Lumen	2500
Contrast	350:1 full on/off
Black Level	7,1429 min. Lumen
Offset	-
Screen Ansi-Lumen	833 Lux (bei 200 cm Screen)
Contrast	350:1 full on/off
Black Level	2,4 min. Lumen
Resolution	XGA 1024 x 768 786.432 Pixel
Video Modes	PAL, SECAM, NTSC
Application	Stationary | Permanent installation in the training room and meeting room as well as the conference room. Medium screen width or rooms with little light, max. 100 lumens.
Light Source	-
Light Life	6000 h.
Operating Costs	-
Focus	-
Zoom	-
Objective	-
Throw Ratio	-
Audio	-
Connections	-
Ceiling Mounting	-
Power	-
Size WxHxD	398,8 x 139,7 x 304,8 mm (15,7"x5,5"x12") 16,82 L/dm³
Operating Noise	-
Weight	13,00 kg / 28,66 lbs.
Keystone	Vert.: +/-15°
Illumination	-
Frequenz	-
Foot-Lamberts	77 fL / max. 435 cm screen width 264 cd/m²
Features	-
Status	- Discontinued (EOL) // Last update of the data: 2023-08-04
Data	

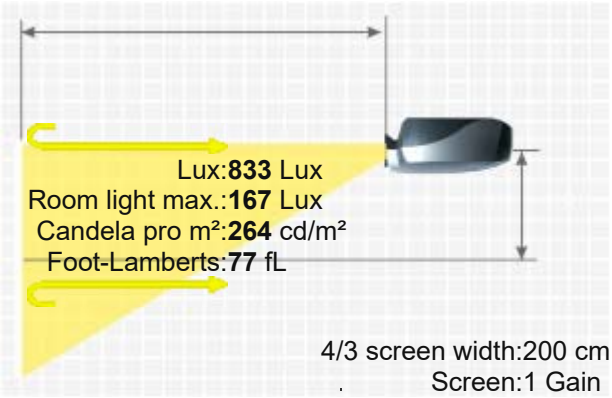

AVSION YS 8000F

More Details

HCinema

https://www.projector-database.com/pro/avsionys8000f-en.html

Due to our ongoing commitment to continuously improve the quality of our projector database, this brochure is also subject to change without notice. HCinema is not responsible for any errors or omissions contained in product descriptions.