DIGITAL PROJECTOR

MW665



Features

- Native WXGA (1280x800) Resolution
- 3,200 ANSI Lumens; 13,000:1 Contrast Ratio
- Up to 10,000 Hours Long Lamp Life
- SmartEco™ Power Saving Technology
- 3D PC & Blu-Ray Ready
- Wireless Display / USB Reader & Display



Input and Output Terminals

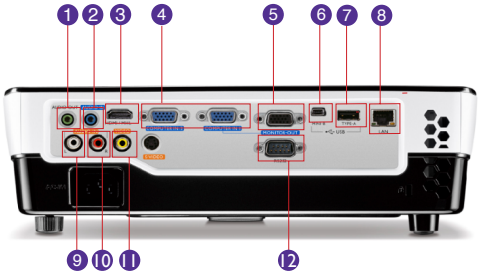

1. Audio In (Mini Jack)
2. Audio Out (Mini Jack)
3. HDMI/MHL
4. Computer In 1/2 (D-sub 15pin)
5. Monitor Out (D-sub 15pin)
6. USB (Type Mini-B)
7. USB (Type A)
8. LAN
9. Audio in L/R (RCA)
10. Composite Video in (RCA)
11. S-Video (Mini DIN 4-pin)
12. RS232 (DB-9pin)

Specifications

Projection System	DLP®
Native Resolution	WXGA (1280x800)
Brightness	3,200AL
Contrast Ratio	13,000:1
Display Color	1.07 Billion Colors
Lens	F2.59-2.87 f=16.88-21.88 mm
Aspect Ratio	Native 16:9 (5 aspect ratio selectable)
Throw Ratio	1.31~1.57(71"@ 2m)
Image Size Diagonal	44"-300"
Zoom Ratio	1.3:1
Lamp Type	210W
Lamp(Normal/Economic/SmartEco/ LampSave)*	3500/5000/6500/10000/2000 hours
Keystone Adjustment	2D, Vertical +/- 40 degrees, Horizontal +/- 25 degrees
Projection Offset	120% ±5%
Resolution Support	VGA(640 x 480) to UXGA(1600 x 1200)
Horizontal Frequency	15K~102KHz
Vertical Scan Rate	23~120Hz
Compatibility	HDTV Compatibility: 480i, 480p, 576i, 576p, 720p, 1080i, 1080p Video Compatibility: NTSC, PAL, SECAM 3D Compatibility: Frame Sequential: Up to 60Hz 720p Frame Packing: Up to 24Hz 1080p Side by Side: Up to 60Hz 1080i Top Bottom: Up to 24Hz 1080p
Interface	Computer in (D-sub 15pin) x 2 (Share with component) Monitor out (D-sub 15pin) x 1 HDMI x1 Composite Video in (RCA) x 1 S-Video in (Mini DIN 4pin) x 1 Audio in (Mini Jack) x 1 Audio out (Mini Jack) x 1 Audio L/R in (RCA) x 1 Speaker 2W x 1 USB (Type A) x 1 USB (Type Mini-B) x 1 (Download & page/down) RS232 (DB-9pin) x 1 RJ45 x 1 IR Receiver x2 (Front+Rear)
Dimensions (WxHxD)	12.2" x 4.09" x 9.6" (w/ feet)
Weight	5.84 lbs (2.65 kg)
Power Supply	AC100 to 240 V, 50 to 60 Hz
Power Consumption	295W, Standby<0.5W
Audible Noise	33/28 dBA (Normal/Economic mode)
On-Screen Display Languages	Arabic/Bulgarian/ Croatian/ Czech/ Danish/ Dutch/ English/ Finnish/ French/ German/ Greek/ Hindi/ Hungarian/ Italian/ Indonesian/ Japanese/ Korean/ Norwegian/ Polish/ Portuguese/ Romanian/ Russian/ Simplified Chinese/Spanish/ Swedish/ Turkish/ Thai/ Traditional Chinese (28 Languages)
Picture Mode	Dynamic/Presentation/sRGB/Cinema/User 1/User 2
Accessories (Standard)	Carry Bag, Remote Control w/ Battery, Power Cord, User Manual CD Quick Start Guide, Warranty Card, VGA(D-sub 15pin) Cable
Accessories (Optional)	Spare Lamp Kit P/N: 5J.J9W05.001 Ceiling Mount P/N: 5J.J4N10.001 3D Glasses P/N: 5J.J7K25.001
UPC Code / Part #	8400460-2848-0 / 9H.J9W77.13E
Limited Warranty	1 Year Parts & Labor / 180 Days or 500 Hours of Lamp Life

*Lamp life results will vary depending on environmental conditions and usage. Actual product's features and specifications are subject to change without notice.

HDMI HIGH-DEFINITION MULTIMEDIA INTERFACE

NEW3D SmartEco 10,000 hours lamp life

MW665 11-07-13-BQus

DLP TEXAS INSTRUMENTS BrilliantColor

BenQ America Corp.
www.BenQ.us

BenQ is a registered trademark of BenQ Corp. DLP® is a registered trademark of Texas Instruments. All rights reserved. Product names, logos, brands, and other trademarks featured or referred to in this materials are the property of their respective trademark holders. Specifications subject to change without notice.

MW665 Digital Projector

Distance Chart

Screen Size				Projection distance (inch)			Vertical offset (inch)
Diagonal		W (inch)	H (inch)	Min distance	Average	Max distance	
Inch	mm			max zoom		min zoom	
60	1524	50	32	61.7	71.0	80.2	3.1
70	1778	59	37	72.0	82.8	93.6	3.7
80	2032	68	72	82.3	94.6	107.0	4.3
90	2286	76	48	92.6	106.5	120.4	4.7
100	2540	84	52	102.9	118.3	133.8	5.3
110	2794	93	58	113.2	130.1	147.2	5.8
120	3048	102	64	123.5	142.0	160.5	6.3
130	3302	110	68	133.8	153.8	173.9	6.8
140	3556	118	74	144.0	165.7	187.3	7.4
150	3810	127	79	154.4	177.5	200.7	7.9
160	4064	136	84	164.6	189.3	214.0	8.4
170	4318	144	90	174.9	201.2	227.4	9.0

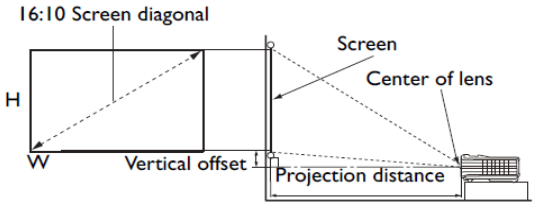

Ceiling Mount Chart

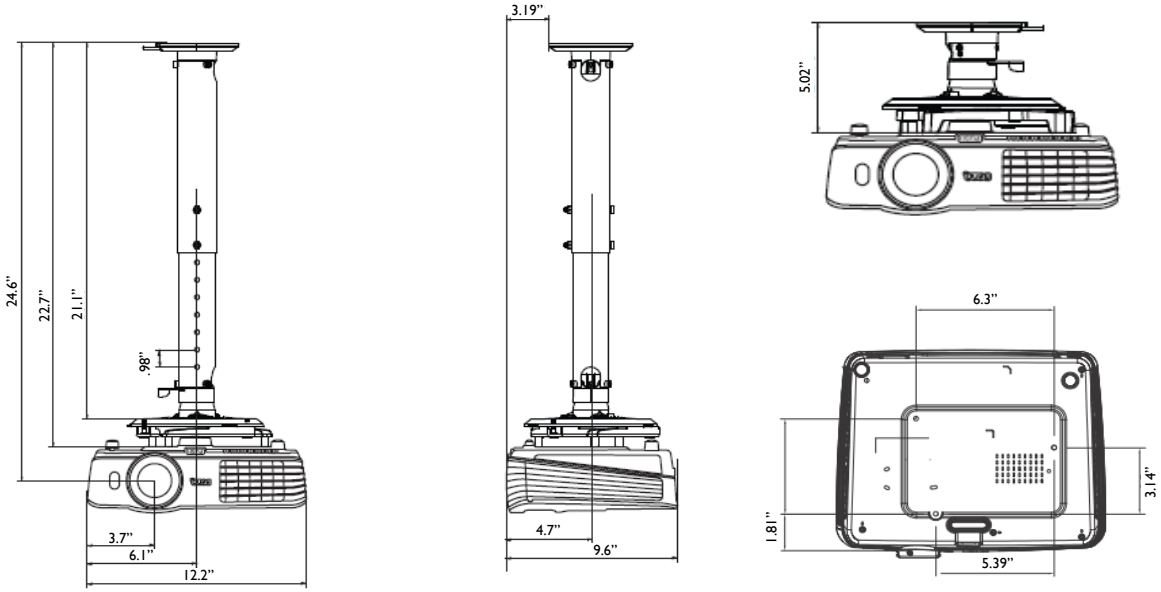

Units: inch

Dimensions

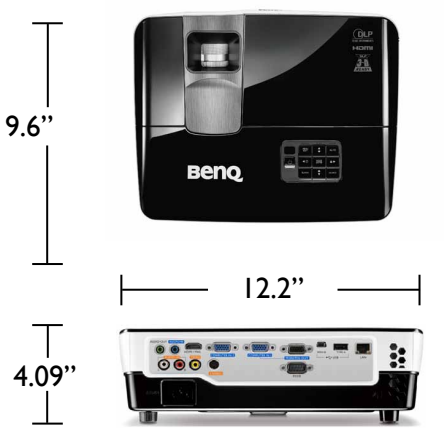



12.2" x 4.09" x 9.6" (w/ feet)