Buhl Buhlite 300

Brief Introduction Beta 2.5	The Buhl Buhlite 300 LCD projector has 300 Ansi lumens, a contrast of 100:1 and a VGA 640 x 480 resolution. The projector will be able to illuminate a picture width of 151 cm well. However, if room light is available, the image width should ideally not exceed 101 cm. The projector is no longer sold by the manufacturer.
Display Type	1 x LCD TFT Panel VGA 4/3 Liquid Crystal Display
Ansi-Lumen	300
Contrast	100:1 full on/off
Black Level	3,0000 min. Lumen
Offset	-
Resolution	VGA 640 x 480 307.200 Pixel
Video Modes	PAL, SECAM, NTSC, HDTV 720p, 1080i, EDTV 480p, 576p
Application	Stationary | Permanent installation in the training room and meeting room as well as the conference room. Very narrow picture width and rooms with very little light.
Light Source	400W Lamp
Light Life	-
Operating Costs	-
Focus	Manual
Zoom	No Zoom
Objective	-
Throw Ratio	-
Audio	2 x 4W
Connections	-
Ceiling Mounting	-
Power	475W
Size WxHxD	-
Operating Noise	-
Weight	7,20 kg / 15,87 lbs.
Keystone	-
Illumination	-
Frequenz	-
Foot-Lamberts	9 fL / max. 151 cm screen width 31 cd/m²
Features	-
Status	- Discontinued (EOL) // Last update of the data: 2023-08-04
Data	

Projector

Screen 100 Lux (bei 200 cm Screen)
100:1 full on/off
1,03 min. Lumen

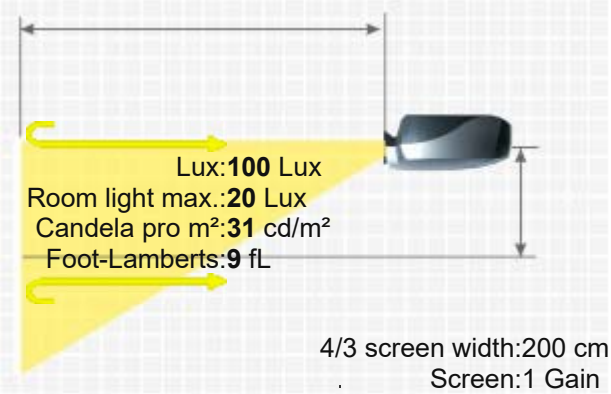

More Details

HCinema
https://www.projector-database.com/pro/buhlbuhlite300-en.html

Due to our ongoing commitment to continuously improve the quality of our projector database, this brochure is also subject to change without notice. HCinema is not responsible for any errors or omissions contained in product descriptions.

BUHL BUHLITE 300