CACACOL P20 Pro



Brief Introduction Beta 2.5	A brief introduction to the CACACOL P20 Pro. The standard portable LCD LED projector has an HDTV 1920 x 1080 resolution and 700 ANSI lumens. The manufacturer states that the LED has a lifespan of 30,000 hours, which is over 20.5 years if used for four hours a day. It is possible to project images up to 269 cm wide. However, the image should be smaller in room light. We recommend a maximum of 179 cm. Since the projector recognises Airplay, Miracast Screen Mirroring signals, it is possible to play videos with high resolution and surround sound directly from a smartphone, tablet, PC (Android, Windows and iOS) via WLAN. In addition, thanks to the Bluetooth function, the projector can be flexibly connected to other speakers. Furthermore, the projector can play 1080P and 4K (compressed) without any problems. At just 29 decibels, the device is one of the quieter projectors.
Display Type	1 x LCD Panel HDTV 16/9 Liquid Crystal Display
Projector Ansi-Lumen	700
Contrast	-
Black Level	-
Offset	-
Screen	311 Lux (bei 200 cm Screen) - -
Resolution	HDTV 1920 x 1080 2.073.600 Pixel UHD (4K2K) 3840 x 2160 compressed
Video Modes	Pal, SECAM, NTSC, HDTV 720p, 1080i, 1080p, 4K UHD (komprimiert), EDTV 480p, 576p
Application	Standard-Portabel | External training and company presentations, as well as product presentations. Small screen width, rooms with very little ambient light below 100 lumens.
Light Source	LED
Light Life	30000 h.
Operating Costs	0,00 € LED
Focus	Automatic
Zoom	No Zoom
Objective	-
Throw Ratio	-
Audio	1 x 8W
Connections	2x HDMI in AV in Audio Mini Jack out RJ45 Bluetooth 5.2

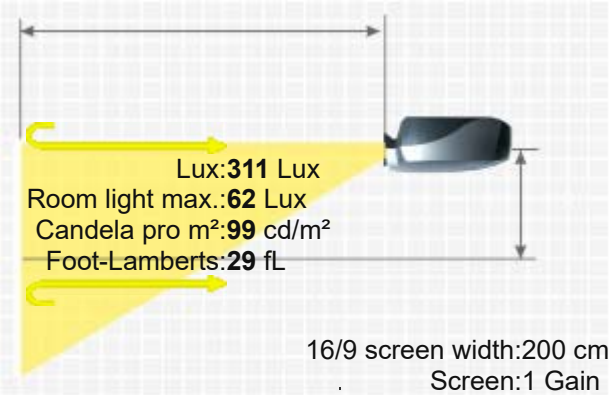

CACACOL P20 PRO

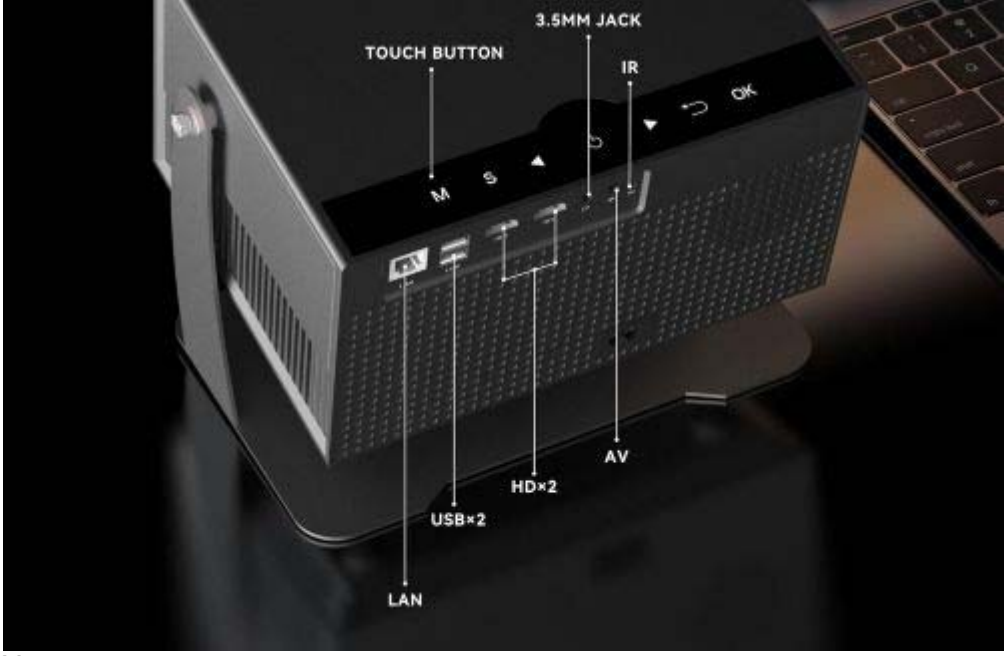

Ceiling Mounting	Yes
Power	-
Size WxHxD	228,1 x 140 x 228,1 mm (9"x5,5"x9") 7,28 L/dm³
Operating Noise	29dB
Weight	3,63 kg / 6,61 lbs.
Keystone	-
Illumination	-
Frequenz	-
Foot-Lamberts	29 fL / max. 269 cm screen width 99 cd/m²
Features	■ Full HD 1080P compatible ■ Wi-Fi network compatible. ■ Lan network compatible. ■ Android 13.0 ■ Auto 4P Keystone ■ Auto Screen Fit

Optionaler Zubehör

Status	2020 Current model // Last update of the data: 2025-01-13 Created: 2025-01-08 15:44:53
Data	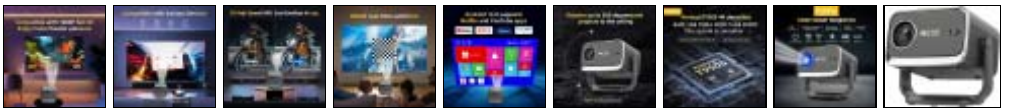
More Details	HCinema https://www.projector-database.com/pro/cacacolp20pro-en.html

Due to our ongoing commitment to continuously improve the quality of our projector database, this brochure is also subject to change without notice. HCinema is not responsible for any errors or omissions contained in product descriptions.