Crosstour P770



Brief Introduction Beta 2.5	The standard portable P770 LED LCD has 210 Ansi lumens, a contrast of 2000:1 and a WVGA 800 x 480 resolution. Due to the LEDs, the projector is specified with 55000 hours of light life, which converts to over 37.7 years at 4 hours per day. As Crosstour specifies the brightness of the projector in lumens, we have calculated an approximate ansi-lumen value in this case. 210 Ansi lumens ensure that a picture width of 147 cm is also possible. However, if room light is available, the picture should be max. 98 cm wide. The model recognizes Airplay, Miracast Screen Mirroring signals, so it is possible to play videos with high resolution and surround sound directly via WLAN from a smartphone, tablet or PC (Android, Windows and iOS). The model is also Full HD 1080P compatible. This model is no longer offered by Crosstour.
Display Type	1 x LCD TFT Panel WVGA 16/9 Liquid Crystal Display
Ansi-Lumen	Projector: 210 / 3500 Lumen — Screen: 93 Lux (bei 200 cm Screen)
Contrast	Projector: 2000:1 — Screen: 2000:1
Black Level	Projector: 0,1050 min. Lumen — Screen: 0,047 min. Lumen
Offset	-
Resolution	WVGA 800 x 480 384.000 Pixel HDTV 1920 x 1080 compressed
Video Modes	Pal, SECAM, NTSC, HDTV 720p, 1080i, 1080p, EDTV 480p, 576p
Application	Standard-Portabel | External training and company presentations, as well as product presentations. Very narrow picture width and rooms with very little light.
Light Source	LED
Light Life	55000 h.
Operating Costs	0,00 € LED
Focus	Manual
Zoom	-
Objective	-
Throw Ratio	-
Audio	Built-in Speaker
Connections	HDMI D-Sub 15 pin in USB Composite Video SD-Karte TV-BOX
Ceiling Mounting	Yes

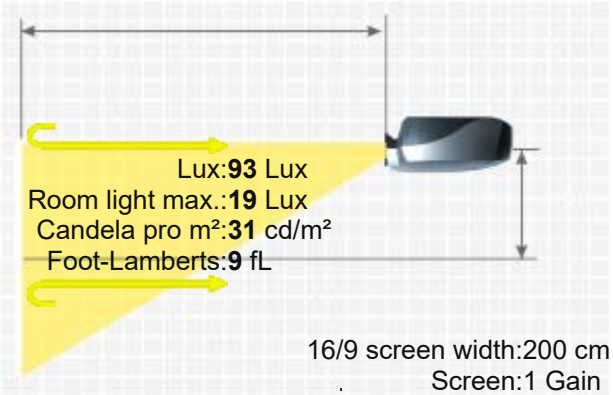

CROSSTOUR P770

Power	-
Size WxHxD	-
Operating Noise	-
Weight	-
Keystone	-
Illumination	-
Frequenz	-
Foot-Lamberts	9 fL / max. 147 cm screen width 31 cd/m²
Features	■ Full HD 1080P compatible ■ Wi-Fi network compatible. -
Status	2019 Discontinued (EOL) // Last update of the data: 2024-10-02
Data	
More Details	HCinema https://www.projector-database.com/pro/crosstourp770-en.html

Due to our ongoing commitment to continuously improve the quality of our projector database, this brochure is also subject to change without notice. HCinema is not responsible for any errors or omissions contained in product descriptions.