CTX EzPro / EP702



Brief Introduction Beta 2.5	A brief introduction to the CTX EzPro / EP702. The standard portable DLP projector has an SVGA 800 x 600 resolution and a contrast of 400:1 200:1 according to Ansi. The projector can illuminate an image width of up to 246 cm well thanks to the 800 Ansi lumens. In room light, however, the picture width should ideally be less than 164 cm. This model is no longer offered by CTX.
Display Type	0,9" DLP Chip SVGA 4/3 Ti Digital Light Processing Chip
Projector: Ansi-Lumen	800
Projector: Contrast	400:1 full on/off 200:1 nach Ansi
Projector: Black Level	2,0000 min. Lumen
Screen	267 Lux (bei 200 cm Screen) 400:1 full on/off 200:1 nach Ansi 0,673 min. Lumen
Offset	-
Resolution	SVGA 800 x 600 480.000 Pixel XGA 1024 x 768 compressed
Video Modes	NTSC, NTSC 4.43, PAL, PAL-M/N und SECAM
Application	Standard-Portabel | External training and company presentations, as well as product presentations. Small screen width, rooms with very little ambient light below 100 lumens.
Light Source	120W P-VIP Lamp Articel Nr.: SP.81408.001 / SP.82004.001
Light Life	2000 h.
Operating Costs	-
Focus	Manual
Zoom	No Zoom
Objective	F=2,88 f=30,7mm
Throw Ratio	1,68:1
Audio	-
Connections	Cinch Video in S-Video in
Ceiling Mounting	-
Power	190W
Size WxHxD	90 x 218 x 252 mm (3,5"x8,6"x9,9") 4,94 L/dm³
Operating Noise	-
Weight	2,30 kg / 5,07 lbs.
Keystone	-
Illumination	-
Frequenz	H-sync: 15-69 kHz V-sync: 50-85 Hz
Foot-Lamberts	25 fL / max. 246 cm screen width 86 cd/m²

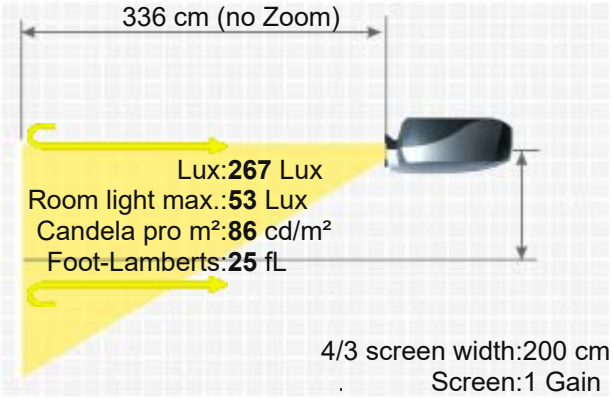

Features	■ Freeze ■ Kensington Slot ■ Picture-in-Picture ■

Optional	
Osram bulb only	NLMP2615
Lamp original	BL-FP120A / SP.81408.001 / SP.82004.001
Universal Remote original	Fernb-uni-V3

Status Data: Order here: https://www.hcinema.de/lampen/shop-en.php?id=n2615
- Discontinued (EOL) // Last update of the data: 2023-08-04

More Details: https://www.projector-database.com/pro/ctxep550-en.html

Due to our ongoing commitment to continuously improve the quality of our projector database, this brochure is also subject to change without notice. HCinema is not responsible for any errors or omissions contained in product descriptions.