CTX EzPro / EP615H



Brief Introduction Beta 2.5	With the EzPro / EP615H, manufacturer CTX offers a standard portable LCD projector with XGA 1024 x 768 resolution and a contrast of 350:1. The projector can illuminate an image width of up to 308 cm thanks to its 1250 Ansi lumens. In room lighting, however, the image width should ideally be less than 205 cm. This model is no longer offered by CTX.
Display Type	3 x 0,9" LCD TFT Panel XGA 4/3 Liquid Crystal Display
Projector: Ansi-Lumen	1250
Projector: Contrast	350:1 full on/off
Projector: Black Level	3,5714 min. Lumen
Projector: Offset	-
Screen	417 Lux (bei 200 cm Screen)
Screen	350:1 full on/off
Screen	1,202 min. Lumen
Resolution	XGA 1024 x 768 786.432 Pixel SXGA 1280 x 1024 compressed
Video Modes	NTSC, NTSC 4.43, PAL, PAL-M/N und SECAM
Application	Standard-Portabel | External training and company presentations, as well as product presentations. Small screen width, rooms with very little ambient light below 100 lumens.
Light Source	150W UHP Lamp Articel Nr.: SP.81218.001
Light Life	2000 h.
Operating Costs	-
Focus	Manual
Zoom	Manual 1,32
Objective	F=2,0-2,3 f=38-50 mm
Throw Ratio	2,08-2,73:1
Audio	1 x3W
Connections	2 xD-sub 15pin in 1 xoutS-Video inCinch Video inCinch Stereo Audio in Mini Jack Ein und Ausgang
Ceiling Mounting	-
Power	190W
Size WxHxD	224 x 109 x 359 mm (8,8"x4,3"x14,1") 8,77 L/dm³
Operating Noise	36dB
Weight	4,00 kg / 8,82 lbs.
Keystone	Vert.: +/-16°
Illumination	80%
Frequenz	H-sync: 20-90 kHz V-sync: 50-85 Hz
Foot-Lamberts	39 fL / max. 308 cm screen width 134 cd/m²
Features	■ Freeze
Status	- Discontinued (EOL) // Last update of the data: 2023-08-04

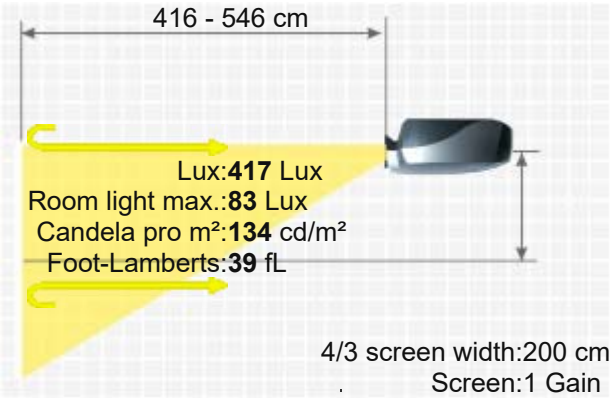

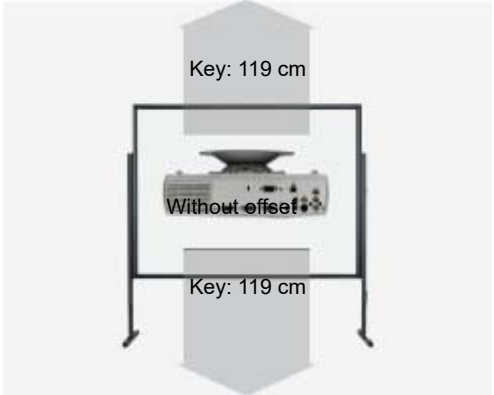

Data

More Details



HCinema
https://www.projector-database.com/pro/ctxep615h-en.html

Due to our ongoing commitment to continuously improve the quality of our projector database, this brochure is also subject to change without notice. HCinema is not responsible for any errors or omissions contained in product descriptions.