CuBeam Mini Projektor



Brief Introduction Beta 2.5	A brief introduction to the mini projector: the CuBeam short-throw LED LCD projector offers 200 ANSI lumens, a contrast ratio of 2000:1 and HDTV 1920 x 1080 resolution. The LEDs give the projector a lifespan of 30,000 hours of light, which is the equivalent of over 20.5 years at 4 hours a day. The model recognises Miracast Screen Mirroring signals, so it is possible to play high-resolution videos with surround sound directly from a smartphone, tablet or PC (Android, Windows and iOS) via Wi-Fi. Another extra feature is the Bluetooth function, which allows the projector to be connected to external wireless speakers. The model is also Full HD 1080P and 4K (compressed) compatible.
Display Type	1 x LCD Panel HDTV 16/9 Liquid Crystal Display
Ansi-Lumen	Projector: 200 / Screen: 89 Lux (bei 200 cm Screen)
Contrast	Projector: 2000:1 / Screen: 2000:1
Black Level	Projector: 0,1000 min. Lumen / Screen: 0,045 min. Lumen
Offset	-
Resolution	HDTV 1920 x 1080 2.073.600 Pixel UHD (4K2K) 3840 x 2160 compressed
Video Modes	Pal, SECAM, NTSC, HDTV 720p, 1080i, 1080p, 4K UHD (komprimiert), EDTV 480p, 576p
Disc Recognition	DVD | HD Blu-ray | ~~3D Blu-ray~~ | 4K UHD Blu-ray (komprimiert)
Application	Short Distance | Very narrow picture width and rooms with very little light.
Light Source	LED
Light Life	30000 h.
Operating Costs	0,00 € LED
Focus	Automatic
Zoom	No Zoom Digital Zoom
Objective	-
Throw Ratio	-
Audio	-
Connections	HDMI in 2x USB-A in Audio Mini Jack out Bluetooth 5.0

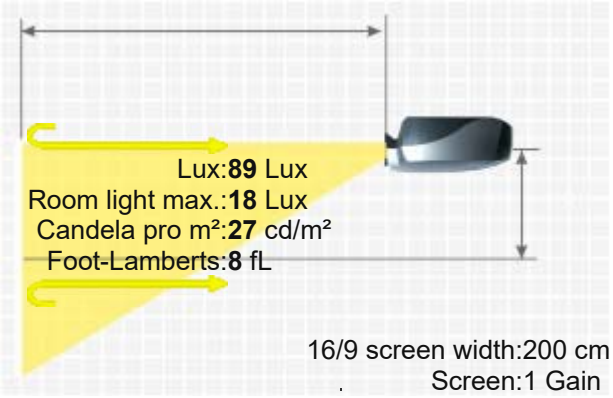

CUBEAM MINI PROJEKTOR



Ceiling Mounting	Yes
Power	-
Size WxHxD	142 x 98 x 134 mm (5,6"x3,9"x5,3") 1,86 L/dm³
Operating Noise	-
Weight	1,40 kg / 2,2 lbs.
Keystone	-
Illumination	-
Frequenz	-
Foot-Lamberts	8 fL / max. 144 cm screen width 27 cd/m²
Features	■ Full HD 1080P compatible ■ Wi-Fi network compatible. ■ Auto 4D Keystone

Optionaler Zubehör

Status	2024 Current model // Last update of the data: 2025-01-13 Created: 2024-12-18 10:33:52
Data	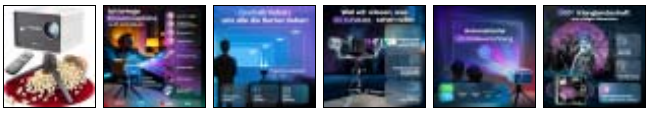
More Details	HCinema https://www.projector-database.com/pro/cubeamminiprojektor-en.html

Due to our ongoing commitment to continuously improve the quality of our projector database, this brochure is also subject to change without notice. HCinema is not responsible for any errors or omissions contained in product descriptions.