Davis DPB 1200

Brief Introduction Beta 2.5	The Davis DPB 1200 LCD projector has 72 Ansi lumens and an XGA 1024 x 768 resolution. As Davis specifies the brightness of the projector in lumens, we have calculated an approximate Ansi lumen value in this case. 72 Ansi lumens ensure that a picture width of 74 cm is also possible. However, if room light is available, the picture should be max. 49 cm wide. The projector is no longer sold by the manufacturer. Unfortunately, we can no longer offer replacement lamps for this model, neither originals nor replicas.		
Display Type	3 x 1,3 LCD TFT Panel XGA 4/3 Liquid Crystal Display		
Ansi-Lumen	Projector: 72 1200 Lumen	Screen: 23 Lux (bei 203 cm Screen)	
Contrast	Projector: -	Screen: -	
Black Level	Projector: -	Screen: -	
Offset	-		
Resolution	XGA 1024 x 768 786.432 Pixel		
Video Modes	NTSC, PAL, SECAM		
Application	Stationary | Permanent installation in the training room and meeting room as well as the conference room. Very narrow picture width and rooms with very little light.		
Light Source	- Lamp Articel Nr.: DPB1200		
Light Life	1300 h.		
Operating Costs	-		
Focus	Powered		
Zoom	Powered 1,3		
Objective	-		
Throw Ratio	-		
Audio	-		
Connections	1 x S-Video: (1) Mini DIN 4-pin 2 x Cinch Video 2 x Stereo chnich in Stereo Chnich 2 x in x 2 D-sub 15pin in 1 x out Maus Port		
Ceiling Mounting	-		
Power	-		
Size WxHxD	330 x 152 x 445 mm (13"x6"x17,5") 22,32 L/dm³		
Operating Noise	-		
Weight	10,00 kg / 22,05 lbs.		
Keystone	-		
Illumination	-		
Frequenz	-		
Foot-Lamberts	2 fL / max. 74 cm screen width 7 cd/m²		
Features	PC Card Reader		
Status	- Discontinued (EOL) // Last update of the data: 2024-06-04		
Data			

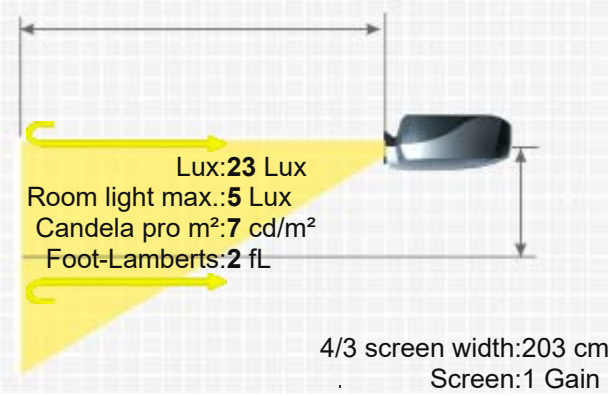

DAVIS DPB 1200

More Details

HCinema

https://www.projector-database.com/pro/davisdpb1200-en.html

Due to our ongoing commitment to continuously improve the quality of our projector database, this brochure is also subject to change without notice. HCinema is not responsible for any errors or omissions contained in product descriptions.