Dell S500wi





DELL S500WI

Brief Introduction Beta 2.5	The Whiteboard S500wi 3D BrilliantColor DLP projector from Dell has 3200 Ansi lumens, a contrast of 2300:1 and a WXGA 1280 x 800 resolution. Includes an integrated media player for direct playback of files. A picture width of up to 575 cm is possible. However, the picture should be smaller in room light. We recommend max. 383 cm. The projector offers an interactive whiteboard function for interactive training courses and presentations. The model is also Full HD 1080P compatible. On the market since 2011, the model is now no longer offered by the manufacturer Dell, but is still very popular in our projector database.
Display Type	1 x 0,65" DC3 DLP Chip WXGA 16/10 Ti Digital Light Processing Chip
Ansi-Lumen	Projector: 3200 / Screen: 1280 Lux (bei 200 cm Screen)
Contrast	Projector: 2300:1 full on/off / Screen: 2300:1 full on/off
Black Level	Projector: 1,3913 min. Lumen / Screen: 0,557 min. Lumen
Offset	-
Resolution	WXGA 1280 x 800 1.024.000 Pixel
Video Modes	PAL, SECAM, NTSC, HDTV 720p, 1080i, 1080p EDTV 480p, 576p
3D Compatibility	**Media player formats:** JPEG PtG Frame Sequential (3D Ready)
Application	Whiteboard | Training and company presentations, as well as product presentations. Medium screen width or rooms with a little more ambient light, max. 200 lumens.
Light Source	- Articel Nr.: 725-10263
Light Life	2500 h. 3000 h. in Eco Mode
Operating Costs	-
Focus	Manual
Zoom	No Zoom
Objective	F=2,71 f=4,415mm
Throw Ratio	0,3:1
Audio	2 x 5W
Connections	HDMI 1.3 in D-sub 15 pin in S-Video in Cinch Video in RJ45 in RS232C 12V Trigger out USB Typ A,B

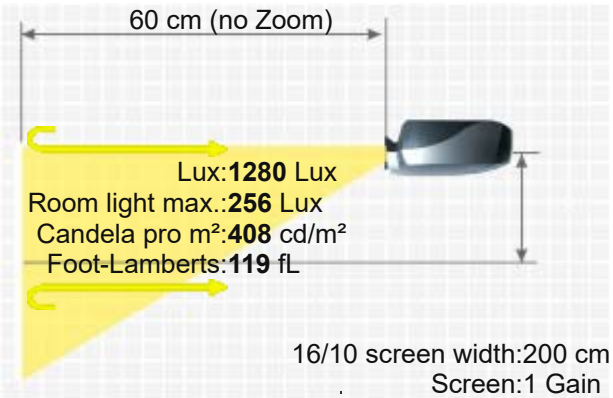

Ceiling Mounting	Yes
Power	345W
Size WxHxD	326,8 x 191 x 420,5 mm (12,9"x7,5"x16,6") 26,15 L/dm³
Operating Noise	31 dB in Eco Mode
Weight	7,08 kg / 15,61 lbs.
Keystone	Vert. +40°-35°
Illumination	80%
Frequenz	-
Foot-Lamberts	119 fL / max. 575 cm screen width 408 cd/m²
Features	■ Full HD 1080P compatible ■ Integrated Mediaplayer ■ Freeze ■ Eco Mode ■ sRGB ■ Password protection ■ BrilliantColor™ ■ Remote control with laser pointer ■ Control via web browser ■ Wi-Fi network compatible. ■ Lan network compatible. ■ Short-throw projector ■ Crestron®-Software compatible. ■ Interactive whiteboard.
Status	2011 Discontinued (EOL) // Last update of the data: 2023-08-04
Data	
More Details	https://www.projector-database.com/pro/dells500i-en.html

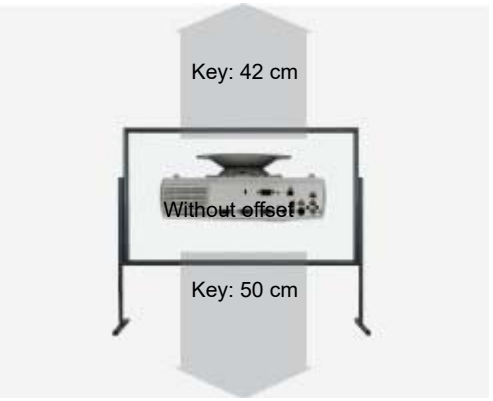

Due to our ongoing commitment to continuously improve the quality of our projector database, this brochure is also subject to change without notice. HCinema is not responsible for any errors or omissions contained in product descriptions.