Digislide XRAY 480



Brief Introduction Beta 2.5	The Digislide model XRAY 480 is a DLP LED projector with SVGA 800 x 600 resolution and a contrast of 1000:1. The manufacturer specifies an LED service life of 30,000 hours, which is over 20.5 years if enjoyed for four hours a day. 123 cm image width, the projector will be able to illuminate well. However, if room light is available, the picture width should ideally not exceed 82 cm. The model built in 2013 is no longer offered by Digislide.
Display Type	1 x 0,45" DLP Chip SVGA 4/3 Ti Digital Light Processing Chip
Ansi-Lumen	Projector: 200 / Screen: 67 Lux (bei 200 cm Screen)
Contrast	Projector: 1000:1 full on/off / Screen: 1000:1 full on/off
Black Level	Projector: 0,2000 min. Lumen / Screen: 0,067 min. Lumen
Offset	-
Resolution	SVGA 800 x 600 480.000 Pixel SXGA 1280 x 1024 compressed
Video Modes	Pal, SECAM, NTSC, HDTV 720p, 1080i, EDTV 480p, 576p
Application	Game-Portabel | Very portable, small-screen projections. Very narrow picture width and rooms with very little light.
Light Source	LED
Light Life	30000 h.
Operating Costs	0,00 € LED
Focus	Manual
Zoom	No Zoom
Objective	-
Throw Ratio	-
Audio	-
Connections	D-sub 15pin in Cinch Video in Mini Jack Audio out SD-Card Reader
Ceiling Mounting	Yes
Power	90W
Size WxHxD	-
Operating Noise	-
Weight	-
Keystone	Vert.: +/-15°
Illumination	-
Frequenz	-
Foot-Lamberts	6 fL / max. 123 cm screen width 21 cd/m²
Features	-
Status	2013 Discontinued (EOL) // Last update of the data: 2023-08-04

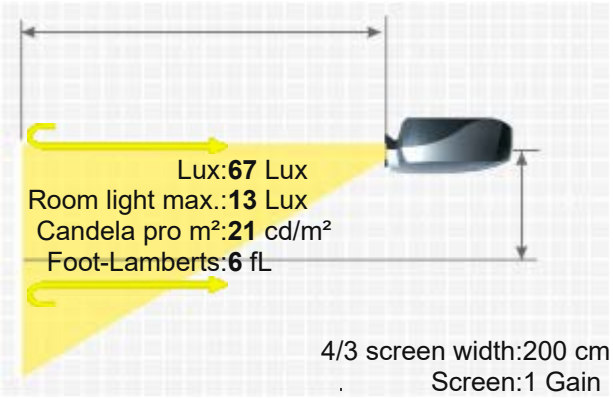

DIGISLIDE XRAY 480

Data

More Details



HCinema
https://www.projector-database.com/pro/digislidexray480-en.html

Due to our ongoing commitment to continuously improve the quality of our projector database, this brochure is also subject to change without notice. HCinema is not responsible for any errors or omissions contained in product descriptions.