Dukane ImagePro 8045



DUKANE IMAGEPRO 8045

Brief Introduction Beta 2.5	The standard portable Dukane ImagePro 8045 LCD projector has 696 Ansi lumens, a contrast of 200:1 and an SVGA 800 x 600 resolution. As Dukane specifies the brightness of the projector in lumens, we have calculated an approximate Ansi lumen value in this case. 696 Ansi lumens ensure that a picture width of 230 cm is also possible. However, if room light is available, the picture should be max. 153 cm wide. The projector is no longer sold by the manufacturer.
Display Type	3 x 0,7 LCD TFT Panel SVGA 4/3 Liquid Crystal Display
Ansi-Lumen	Projector: 696 800 Lumen / Screen: 225 Lux (bei 203 cm Screen)
Contrast	Projector: 200:1 full on/off / Screen: 200:1 full on/off
Black Level	Projector: 3,4800 min. Lumen / Screen: 1.142 min. Lumen
Offset	-
Resolution	SVGA 800 x 600 480.000 Pixel
Video Modes	NTSC, NTSC 4.43 PAL, MPAL,NPAL, PAL60, SECAM, S-Video
Application	Standard-Portabel | External training and company presentations, as well as product presentations. Small screen width, rooms with very little ambient light below 100 lumens.
Light Source	130W UHB Lamp Articel Nr.: 456-214
Light Life	1500 h.
Operating Costs	-
Focus	Manual
Zoom	Manual 1,2
Objective	-
Throw Ratio	-
Audio	1 x 1W
Connections	(1) Min DIN 4-pin S-Video (1) RCA composite (1) Signal; D-sub 15pin computer (1) Audio, Stereo mini jack Outputs 15 pin monitor, D-sub
Ceiling Mounting	-
Power	200W
Size WxHxD	-
Operating Noise	34dB
Weight	-
Keystone	-
Illumination	-
Frequenz	H-sync: 15-69 kHz V-sync: 50-85 Hz
Foot-Lamberts	21 fL / max. 230 cm screen width 72 cd/m²
Features	Freeze

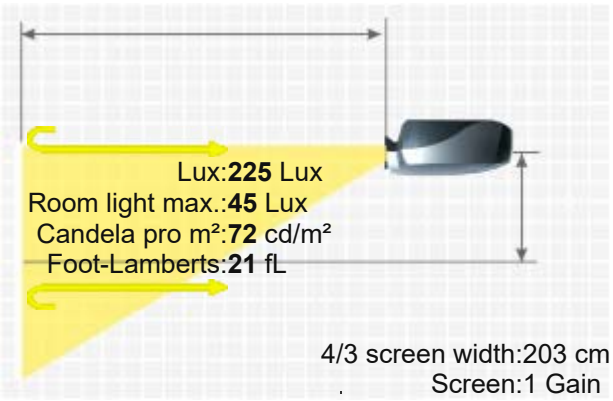

Status - Discontinued (EOL) // Last update of the data: 2024-06-04
Data

More Details

HCinema
https://www.projector-database.com/pro/dukaneimagepro8045-en.html

Due to our ongoing commitment to continuously improve the quality of our projector database, this brochure is also subject to change without notice. HCinema is not responsible for any errors or omissions contained in product descriptions.