Dukane ImagePro 8102



3LCD | Kurzdistanz | Netzwerk | USB

Brief Introduction Beta 2.5	The Dukane ImagePro 8102 LCD projector has 2500 Ansi lumens, a contrast of 500:1 and an XGA 1024 x 768 resolution. With a projection ratio of just 0.37:1, this projector never gets in the way. For a 2m wide image, the projector needs to be just 74 cm away from the screen. On the market since 2010, the model is no longer offered by the manufacturer Dukane.		
Display Type	3 x 0,63" LCD TFT Panel XGA 4/3 Liquid Crystal Display		
Ansi-Lumen	2500 / 2000 im Eco Mode	Screen	833 Lux (bei 200 cm Screen)
Contrast	500:1 full on/off		500:1 full on/off
Black Level	5,0000 min. Lumen		1,676 min. Lumen
Offset	-		
Resolution	XGA 1024 x 768 786.432 Pixel UXGA 1600 x 1200 compressed		
Video Modes	PAL, SECAM, NTSC, HDTV 720p, 1080i, EDTV 480p, 576p		
Disc Recognition	DVD | HD Blu-ray (komprimiert) | ~~3D Blu-ray~~ | ~~4K UHD Blu-ray~~		
Application	Short Distance | Medium screen width or rooms with little light, max. 100 lumens.		
Light Source	220W UHB Lamp Articel Nr.: 456-8100		
Light Life	2000 h. 3000 h. in Eco Mode		
Operating Costs	-		
Focus	Manual		
Zoom	No Zoom		
Objective	F=2,1 f=5,1mm		
Throw Ratio	0,37:1		
Audio	7W Mono		
Connections	2 x D-sub 15pin in 1 x out S-Video in Cinch Video in Cinch Stereo in Mini Jack Audio out RS232C Din 9 pin in USB Typ B RJ45		
Ceiling Mounting	Yes		
Power	340W		
Size WxHxD	397 x 225 x 378 mm (15,6"x8,9"x14,9") 33,76 L/dm³		
Operating Noise	33 / 28 dB in Eco Mode		
Weight	5,80 kg / 12,79 lbs.		
Keystone	Vert.: +/-5° automatisch		
Illumination	-		
Frequenz	H-sync: 15-106 kHz V-sync: 50-120 Hz		

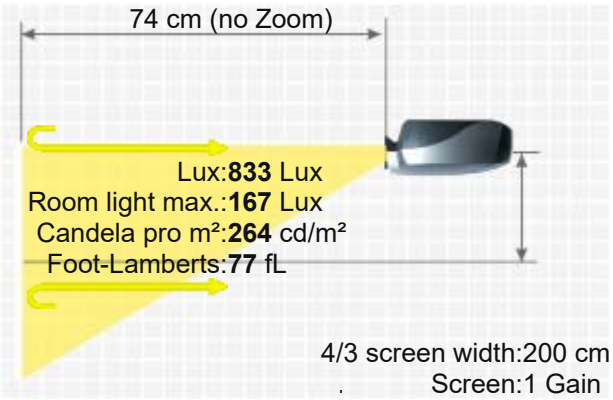

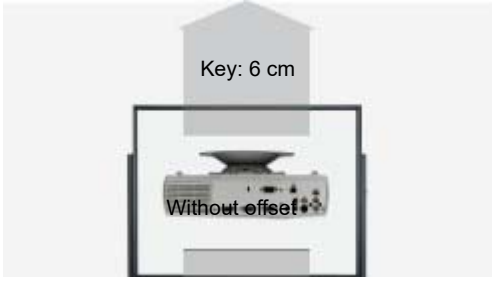

DUKANE IMAGEPRO 8102

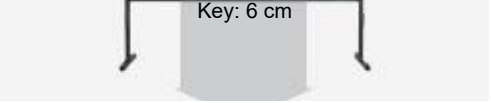

Foot-Lamberts	77 fL / max. 435 cm screen width 264 cd/m²
Features	■ Freeze ■ Blank (Black screen button) ■ Blackboard Modus ■ Eco Mode ■ Automatic and manual vertical keystone correction ■ Kensington Slot ■ Gamma correction ■ Password protection ■ Remote control with mouse control ■ Lan network compatible. ■ Overscan adjustable ■ Short-throw projector ■ Digital Zoom ■ De-interlacer with 3:2 pull down..
Status Data	2010 Discontinued (EOL) // Last update of the data: 2023-08-04
More Details	HCinema https://www.projector-database.com/pro/dukaneimagepro8102-en.html

Due to our ongoing commitment to continuously improve the quality of our projector database, this brochure is also subject to change without notice. HCinema is not responsible for any errors or omissions contained in product descriptions.