Dukane ImagePro 8746









Brief Introduction Beta 2.5	The micro-portable ImagePro 8746 DLP has 1100 Ansi lumens, a contrast of 800:1 and an XGA 1024 x 768 resolution. The projector can illuminate an image width of up to 289 cm well thanks to the 1100 Ansi lumens. In room light, however, the image width should ideally be less than 193 cm. This model is no longer offered by Dukane, but is still a popular projector in our database.
Display Type	1 x 0,7" DDR DLP Chip XGA 4/3 Ti Digital Light Processing Chip
Projector: Ansi-Lumen	1100
Projector: Contrast	800:1 full on/off
Projector: Black Level	1,3750 min. Lumen
Screen	356 Lux (bei 203 cm Screen) 800:1 full on/off 0.447 min. Lumen
Offset	
Resolution	XGA 1024 x 768 786.432 Pixel SXGA 1280 x 1024 compressed
Video Modes	NTSC, PAL, SECAM, SDTV (480i), EDTV (480p)
Application	Micro-Portabel | Small mobile presentations.. Small screen width, rooms with very little ambient light below 100 lumens.
Light Source	120W UHP Lamp Articel Nr.: 456-241
Light Life	3000 h.
Operating Costs	-
Focus	Manual
Zoom	Manual 1,27
Objective	F=2,0-2,2 f=26-33 mm
Throw Ratio	1,85-2,35:1
Audio	1 x 1W Mono
Connections	1 computer analog, 1 S-video, 1 composite video, 1 DVI connector, audio line in Anschlüsse Bild
Ceiling Mounting	Yes
Power	155W
Size WxHxD	199 x 63,4 x 148 mm (7,8"x2,5"x5,8") 1,86 L/dm³
Operating Noise	32dB
Weight	1,10 kg / 2,43 lbs.
Keystone	Vert.: +/-15°
Illumination	-
Frequenz	H-sync: 15-100 kHz V-sync: 43,5-130 Hz
Foot-Lamberts	33 fL / max. 289 cm screen width

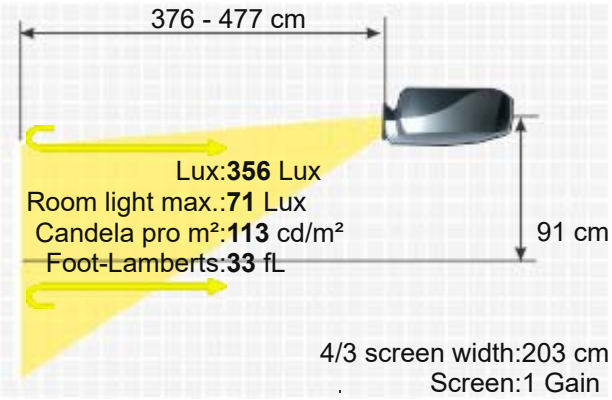



DUKANE IMAGEPRO 8746

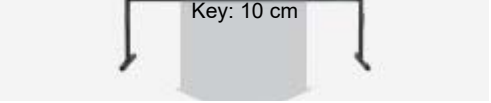

113 cd/m²

Features
- Freeze
- Kensington Slot
- Picture-in-Picture

Status Data
- Discontinued (EOL) // Last update of the data: 2023-08-04

More Details

https://www.projector-database.com/pro/dukaneimagepro8746-en.html

Due to our ongoing commitment to continuously improve the quality of our projector database, this brochure is also subject to change without notice. HCinema is not responsible for any errors or omissions contained in product descriptions.