Dukane ImagePro 8761A



Brief Introduction Beta 2.5	The ImagePro 8761A DLP has 2500 Ansi lumens, a contrast of 1600:1 and an XGA 1024 x 768 resolution. The integrated media player allows files to be played directly. The horizontal and vertical keystone correction provides leeway when setting up. A picture width of up to 435 cm is possible. However, the picture should be smaller in room light. We recommend max. 290 cm. This model is no longer offered by Dukane.
Display Type	1 x 0,7" 12° DDR DLP Chip XGA 4/3 Ti Digital Light Processing Chip
Projector Ansi-Lumen	2500 / 2000 im Eco Mode
Contrast	1600:1 full on/off
Black Level	1,5625 min. Lumen
Offset	
Screen	833 Lux (200 cm Screen width)
	1600:1 full on/off
	0,522 min. Lumen
Resolution	XGA 1024 x 768 786.432 Pixel UXGA 1600×1200 compressed
Video Modes	PAL, SECAM, NTSC, HDTV 720p, 1080i, EDTV 480p, 576p **Media player formats:** idx-, Text-, HTML-, JPEG- und BMP-Format
Application	Standard-Portabel | External training and company presentations, as well as product presentations. Medium screen width or rooms with little light, max. 100 lumens.
Light Source	220W Lamp Article Nr.: 456-8760
Light Life	2000 h. 4000 h. in Eco Mode
Operating Costs	-
Focus	Manual
Zoom	Manual 1,2
Objective	F=2,2-2,5 f=28,4-34,0 mm
Throw Ratio	2,0-2,4:1
Audio	1 x 2W Mono
Connections	D-sub 15pin in Cinch Video in Cinch Stereo in S-Video in PCMCIA in USB Typ A & B Mini jack in RS232C RJ45

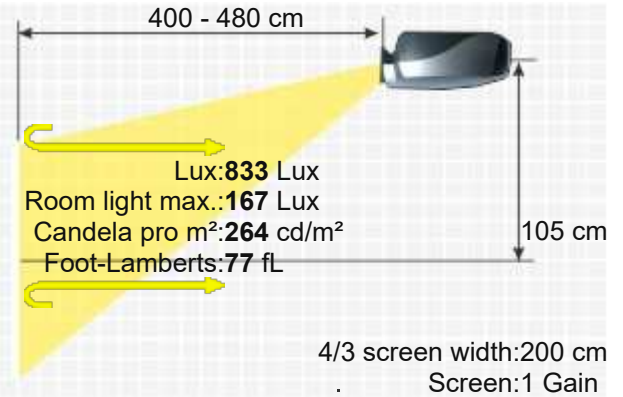

DUKANE IMAGEPRO 8761A



Ceiling Mounting	Yes, is possible.
Power	280W / 0.6W standby
Size WxHxD	259,1 x 121,9 x 315 mm (10,2"x4,8"x12,4") 9,87 L/dm³
Operating Noise	32 / 29 dB in Eco Mode

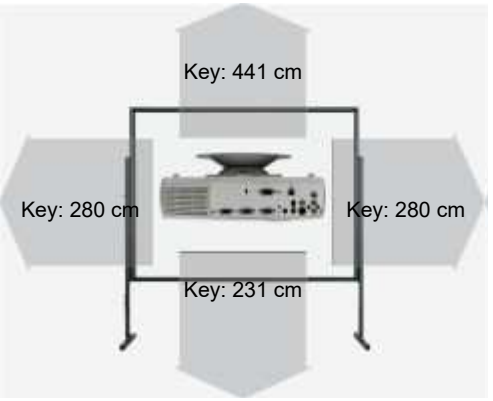

Weight	2,90 kg / 4,41 lbs.
Keystone	Vert.: +/-40° Hori.: +/-35°
Illumination	-
Frequenz	H-sync: 15-100 kHz V-sync: 50-120 Hz Range max.: 135 MHz
Foot-Lamberts	77 fL / max. 435 cm screen width 264 cd/m²
Features	■ Integrated Mediaplayer ■ Freeze ■ Eco Mode ■ Kensington Slot ■ sRGB ■ Gamma correction ■ Dynamic iris ■ Password protection ■ Remote control with laser pointer ■ Control via web browser ■ Lan network compatible. ■ Overscan adjustable
Screen Mirroring	Optional only Chromecast / Fire TV / Apple TV / Mi Box Ads

Optional accessories



Deckenhalterung Länge 100-120 mm	Halterung120	47,86 €

Status 2005 Discontinued (EOL) // Last update of the data: 2025-12-22

Data






More Details

HCinema

https://www.projector-database.com/pro/dukaneimagepro8761a-en.html

Due to our ongoing commitment to continuously improve the quality of our projector database, this brochure is also subject to change without notice. HCinema is not responsible for any errors or omissions contained in product descriptions.