Dukane ImagePro 8808



3LCD | Lens Shift | WiFi Optional | Media Player | PJLink | Pointer | Netzwerk | W.-Optiken | Warping | sRGB | USB

Brief Introduction Beta 2.5	The stationary Dukane ImagePro 8808 LCD projector has 4000 Ansi lumens, a contrast of 800:1 and an XGA 1024 x 768 resolution. The projector also offers an integrated media player for direct playback of files. The integrated lens shift gives freedom when positioning the projector. An image width of up to 551 cm is possible, if the image width is smaller (we recommend max. 367 cm), rooms with residual light are also no problem. The projector was launched in 2008 and is no longer sold by the manufacturer.
Display Type	3 x 0,8" LCD TFT Panel mit MLA XGA 4/3 Liquid Crystal Display with Micro Lense Array
Ansi-Lumen	Projector: 4000 / 3300 im Eco Mode — Screen: 1333 Lux (bei 200 cm Screen)
Contrast	Projector: 800:1 full on/off — Screen: 800:1 full on/off
Black Level	Projector: 5,0000 min. Lumen — Screen: 1,673 min. Lumen
Lens shift	Vert.: +50% -0% Hori.: +/-10% manuell
Resolution	XGA 1024 x 768 786.432 Pixel UXGA 1600 x 1200 compressed
Video Modes	PAL, SECAM, NTSC, HDTV 720p, 1080i, EDTV 480p, 576p **Media player formats:** JPEG, BMP, PNG, GIF
Application	Stationary | Permanent installation in the training room and meeting room as well as the conference room. Wide screen width or rooms with plenty of light (over 200 lumens).
Light Source	280 / 252W NSH Lamp Articel Nr.: 456-8806
Light Life	2000 h. 3000 h. inEco Mode
Operating Costs	-
Focus	Manual
Zoom	Manual 1,33
Objective	F=1,7-2,2 f=24,4-32,5 mm
Throw Ratio	1,5-2,0:1
Audio	2 x 5W Stereo
Connections	DVI-D mit HDCP in D-sub 15pin in und out 5 x BNC RGBHV in YUV in S-Video in Cinch Video in 2 x Cinch Stereo in 1 x out RJ45in PCMCIA Slot Type-2 RS232C D-sub15pin USB Typ A Mini Jack in

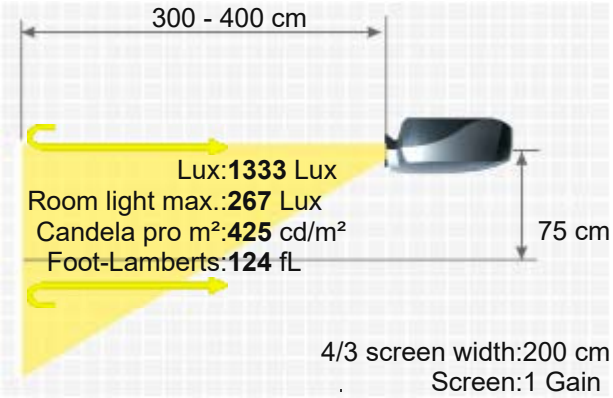

DUKANE IMAGEPRO 8808



Ceiling Mounting	Yes
Power	435 / 365W in Eco Mode
Size WxHxD	399 x 150 x 358 mm (15,7"x5,9"x14,1") 21,43 L/dm³
Operating Noise	35 / 30 dB in Eco Mode

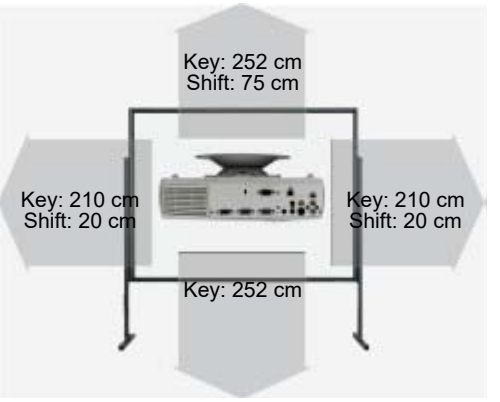

Weight	7,30 kg / 16,09 lbs.
Keystone	Vert.: +/-40° Hori.: +/-35°
Illumination	-
Frequenz	H-sync: 15-100 kHz V-sync: 48-120 Hz
Foot-Lamberts	124 fL / max. 551 cm screen width 425 cd/m²
Features	■ Direkt Power Off ■ Lens shift Funktion manuell ■ Integrated Mediaplayer ■ Freeze ■ Blackboard Modus ■ Eco Mode ■ Kensington Slot ■ sRGB ■ Gamma correction ■ Warping ■ Password protection ■ Remote control with laser pointer ■ PJLink™ ■ Control via web browser ■ Optional Wi-Fi network compatible. ■ Lan network compatible. ■ Overscan adjustable ■ 3D Reform ■ Auto colour correction, ■ remote control with mouse control, ■ 3-fold security system, ■ 4-fold digital zoom,
Please note	Prospekt englisch ist fehlerhaft.

Optional Lenses

Name	Ratio	Distance	Shift V	Shift H	Zoom
Zoom Optional Lenses					
NP05ZL	4.62-7.02:1	9.2-14 m	50%	+/-10%	Manual
NP04ZL	2.98-4.77:1	6-9.5 m	50%	+/-10%	Manual
NP03ZL	1.94-3.07:1	3.9-6.1 m	50%	+/-10%	Manual
NP02ZL	1.18-1.54:1	2.4-3.1 m	50%	+/-10%	Manual
Fix Optional Lenses					
NP01FL	0.8:1	1.6 m	0.0% Fix		No Zoom

Status: 2008 Discontinued (EOL) // Last update of the data: 2023-08-04

Data



More Details

HCinema

https://www.projector-database.com/pro/dukaneimagepro8808-en.html

Due to our ongoing commitment to continuously improve the quality of our projector database, this brochure is also subject to change without notice. HCinema is not responsible for any errors or omissions contained in product descriptions.