Eiki LC 7100



3LCD Motor

Brief Introduction Beta 2.5	The Eiki LC 7100 LCD projector has 550 Ansi lumens, a contrast of 100:1 and a resolution. A picture width of up to 204 cm is possible. However, the image should be smaller in room light. We recommend max. 136 cm. On the market since 1997, the model is no longer offered by the manufacturer Eiki. Unfortunately, we can no longer offer replacement lamps for this model, neither originals nor replicas.
Display Type	3 x LCD TFT Panel SVGA 4/3 Liquid Crystal Display

	Projector	Screen
Ansi-Lumen	550	183 Lux (bei 200 cm Screen)
Contrast	100:1 full on/off	100:1 full on/off
Black Level	5,5000 min. Lumen	1,885 min. Lumen

Offset	-
Resolution	SVGA 832 x 624
Video Modes	NTSC, PAL, SECAM
Application	Stationary | Permanent installation in the training room and meeting room as well as the conference room. Very narrow picture width and rooms with very little light.
Light Source	270W Metalldampf Lamp Articel Nr.: LC-7100
Light Life	2000 h.
Operating Costs	-
Focus	Powered
Zoom	Powered 1,6
Objective	F=2,5-3,2 f=47-75 mm
Throw Ratio	-
Audio	2 x 2W
Connections	2 x D-sub 15pin in Cinch Video in S-Video in Cinch Stereo in
Ceiling Mounting	-
Power	360W
Size WxHxD	296 x 149 x 460 mm (11,7"x5,9"x18,1") 20,29 L/dm³
Operating Noise	42dB

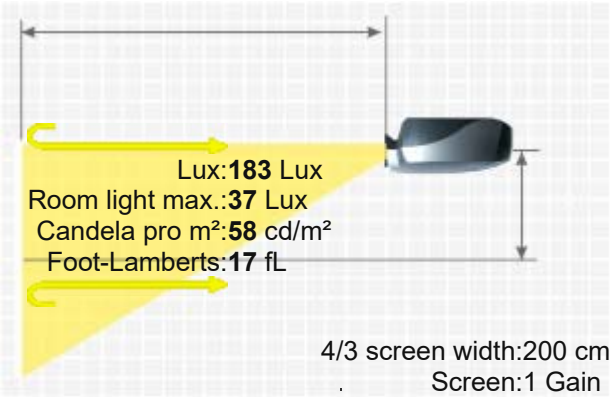

Weight	7,20 kg / 15,87 lbs.
Keystone	-
Illumination	70%
Frequenz	H-sync: 15-58 kHz V-sync: 50-75 Hz
Foot-Lamberts	17 fL / max. 204 cm screen width 58 cd/m²
Features	-
Status	1997 Discontinued (EOL) // Last update of the data: 2023-08-04
Data	

More Details

HCinema

https://www.projector-database.com/pro/eikilc7100-en.html

Due to our ongoing commitment to continuously improve the quality of our projector database, this brochure is also subject to change without notice. HCinema is not responsible for any errors or omissions contained in product descriptions.