Epoque EFP 2520





EPOQUE EFP 2520

Brief Introduction Beta 2.5	A brief introduction to the Epoque EFP 2520. The LCD projector has an XGA 1024 x 768 resolution and a contrast of 200:1. An image width of up to 246 cm is possible, as the projector has 800 Ansi lumens. However, if room light is available, the picture should be max. 164 cm wide. The model is no longer offered by Epoque.
Display Type	1 x 1,6 LCD TFT Panel mit MLA XGA 4/3 Liquid Crystal Display with Micro Lense Array
Projector Ansi-Lumen	800
Contrast	200:1 full on/off
Black Level	4,0000 min. Lumen
Offset	-
Screen	259 Lux (bei 203 cm Screen) 200:1 full on/off 1.315 min. Lumen
Resolution	XGA 1024 x 768 786.432 Pixel SXGA 1280 x 1024 compressed
Video Modes	NTSC, PAL, SECAM Pal 60 NTSC 4,43
Application	Standard-Portabel | External training and company presentations, as well as product presentations. Small screen width, rooms with very little ambient light below 100 lumens.
Light Source	150W SHP Lamp
Light Life	2000 h.
Operating Costs	-
Focus	Manual
Zoom	No Zoom 1,18
Objective	F=1,7-2,0
Throw Ratio	-
Audio	1 x 2W Stereo
Connections	1 RGB inputs (D-sub 15pins 1) 1 DVI inputs (Digital Keystone Korrektur 1) 2 audio inputs für RGB inputs (Stereo mini jack2) 1 PS/2 connectivity (Centronic 8 pins) 1 USB port 1 component video input (Y Cb Cr 1) 1 S-Video input (mini DIN/4 pins 1) 1 composite video input (RCA 1) 1 audio input für video (RCA L&R 2) 1 RGB outputs (D-sub 15pins 1) 1 audio outputs für RGB inputs (Stereo mini jack 1)
Ceiling Mounting	-

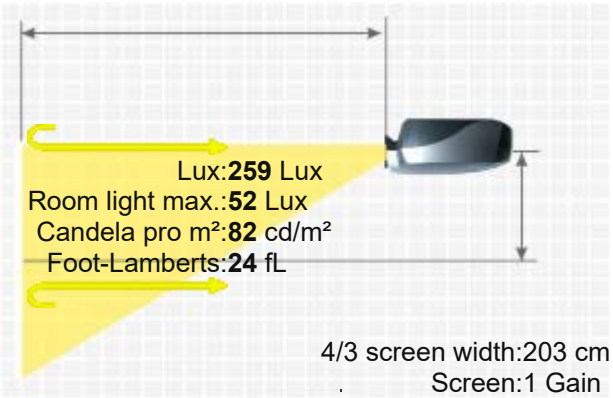

Power	213W
Size WxHxD	213 x 94 x 283 mm (8,4"x3,7"x11,1") 5,67 L/dm³
Operating Noise	-
Weight	2,80 kg / 6,17 lbs.
Keystone	-
Illumination	85%
Frequenz	H-sync: 15-91 kHz V-sync: 43-85 Hz
Foot-Lamberts	24 fL / max. 246 cm screen width 82 cd/m²
Features	■ Remote control with laser pointer
Status	- Discontinued (EOL) // Last update of the data: 2023-08-04
Data	
More Details	HCinema https://www.projector-database.com/pro/epoqueefp2520-en.html

Due to our ongoing commitment to continuously improve the quality of our projector database, this brochure is also subject to change without notice. HCinema is not responsible for any errors or omissions contained in product descriptions.