Epoque EFP 5310

Brief Introduction Beta 2.5	A brief introduction to the EFP 5310: The Epoque standard portable LCD projector offers 1200 Ansi lumens, a contrast of 400:1 and an SVGA 800 x 600 resolution. An image width of up to 302 cm is possible as the projector has 1200 Ansi lumens. However, if room light is available, the picture should be max. 201 cm wide. The projector is no longer sold by the manufacturer.
Display Type	3 x 0,7 psi TFT Panels mit MLA SVGA 4/3 Liquid Crystal Display with Micro Lense Array
Projector Ansi-Lumen	1200
Contrast	400:1 full on/off
Black Level	3,0000 min. Lumen
Offset	-
Screen Ansi-Lumen	388 Lux (bei 203 cm Screen)
Contrast	400:1 full on/off
Black Level	0.978 min. Lumen
Resolution	SVGA 800 x 600 480.000 Pixel XGA 1024 x 768 compressed
Video Modes	NTSC, PAL, SECAM Pal 60 NTSC 4,43
Application	Standard-Portabel | External training and company presentations, as well as product presentations. Small screen width, rooms with very little ambient light below 100 lumens.
Light Source	150W UHE Lamp
Light Life	-
Operating Costs	-
Focus	Manual
Zoom	No Zoom
Objective	F=1,7-2,0 f=24,78mm
Throw Ratio	1,74:1
Audio	2 x 1W
Connections	Mini Jack in und out Cinch Video in S-Video in 3 x Cinch YUV 1 x D-sub 15pin in DVI in Controler Cinch Stereo
Ceiling Mounting	Yes
Power	200W
Size WxHxD	234 x 105 x 355 mm (9,2"x4,1"x14") 8,72 L/dm³
Operating Noise	-
Weight	2,90 kg / 6,39 lbs.
Keystone	Vert.: +/-20°
Illumination	80%
Frequenz	H-sync: 15-91 kHz V-sync: 43-85 Hz
Foot-Lamberts	36 fL / max. 302 cm screen width 123 cd/m²
Features	■ Freeze ■ Remote control with laser pointer ■ digital Zoom, , Resize,
Status Data	- Discontinued (EOL) // Last update of the data: 2023-08-04

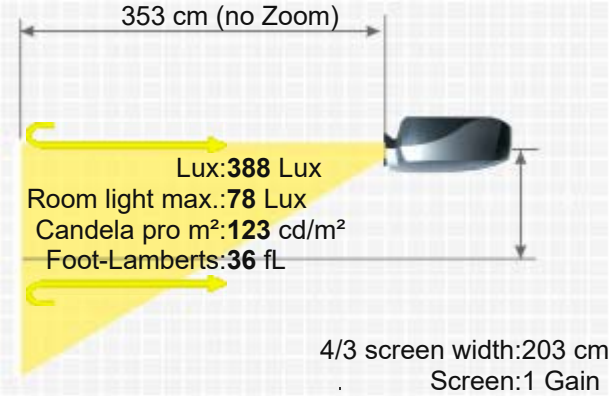

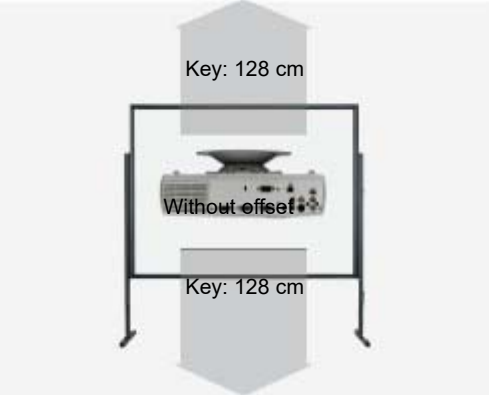

EPOQUE EFP 5310

More Details

HCinema

https://www.projector-database.com/pro/epoqueefp5310-en.html

Due to our ongoing commitment to continuously improve the quality of our projector database, this brochure is also subject to change without notice. HCinema is not responsible for any errors or omissions contained in product descriptions.