Epson EB 595WI



3LCD | Kurzdistanz | Whiteboard | WiFi Integriert | Media Player | Netzwerk | USB

Brief Introduction Beta 2.5	The Epson EB 595WI LCD projector has 3300 Ansi lumens, a contrast of 10000:1 and a WXGA 1280 x 800 resolution. The lamp in the projector is specified with a lamp life of 4000 hours, which is over 5.5 years with a daily viewing time of 2 hours. The integrated media player can play files directly. An image width of up to 584 cm is possible as the projector has 3300 Ansi lumens. However, if room light is available, the picture should be max. 389 cm wide. The projector also offers a whiteboard function that makes training and presentation rooms interactive. The model was built by Epson in 2014 and is no longer current, but is still very popular in our projector database.
Display Type	3 x LCD TFT Panel WXGA 16/10 Liquid Crystal Display
Ansi-Lumen	Projector: 3300 / 1900 im Eco Mode — Screen: 1320 Lux (bei 200 cm Screen)
Contrast	Projector: 10000:1 full on/off — Screen: 10000:1 full on/off
Black Level	Projector: 0,3300 min. Lumen — Screen: 0,132 min. Lumen
Offset	-
Resolution	WXGA 1280 x 800 1.024.000 Pixel
Video Modes	Pal, SECAM, NTSC, HDTV 720p, 1080i, EDTV 480p, 576p **Media player formats:** .jpg .bmp .gif .png .avi
Application	Whiteboard | Training and company presentations, as well as product presentations. Medium screen width or rooms with a little more ambient light, max. 200 lumens.
Light Source	-
Light Life	Articel Nr.: ELPLP80 / V13H010L80 4000 h. 6000 h. in eco Mode
Operating Costs	-
Focus	Manual
Zoom	No Zoom
Objective	F=1,8 f=3,71mm
Throw Ratio	0,27:1
Audio	16W
Connections	2 x HDMI in 2 x D-sub 15pin in und out USB Typ A,B RS232C Din 9 pin in Mini Jack Audio in und out RJ45 in
Ceiling Mounting	Yes
Power	358 / 270W ImEco Mode
Size WxHxD	367 x 155 x 375 mm (14,4"x6,1"x14,8") 21,33 L/dm³
Operating Noise	38 / 28 dB in Eco Mode
Weight	5,50 kg / 11,02 lbs.
Keystone	Vert.: +/-3°
Illumination	-

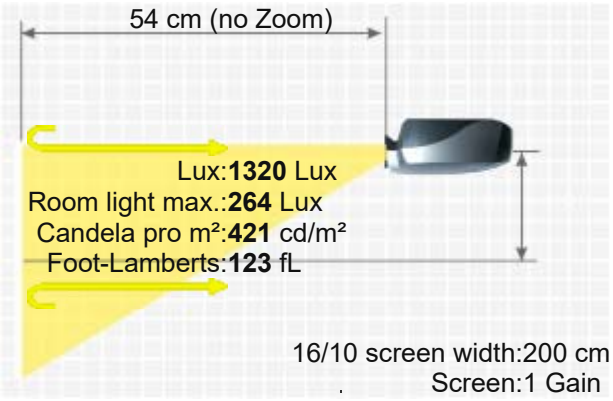



EPSON EB 595WI

Frequenz	-
Foot-Lamberts	123 fL / max. 584 cm screen width
	421 cd/m²



Features

- Integrated Mediaplayer
- Eco Mode
- Wi-Fi network compatible.
- Lan network compatible.
- Short-throw projector
- Interactive whiteboard function with finger possible.

Optional

Interactive pen top original	V12H668010 / ELPPS02
Interactive Pen original	V12H667010 / ELPPN04B
Interaktictive pen orange original	V12H666010 / ELPPN04A
Lamp original	ELPLP80 / V13H010L80
Document camera original	ELPDC21 / V12H758040
Air filter original	ELPAF40 / V13H134A40
Remote control original	1613717

Order here: https://www.hcinema.de/lampen/shop-en.php?id=hc1787

Status

2014 Discontinued (EOL) // Last update of the data: 2023-08-30

Data

Created: 2014-01-21 14:57:57

More Details

HCinema

https://www.projector-database.com/pro/epsoneb595wi-en.html

Due to our ongoing commitment to continuously improve the quality of our projector database, this brochure is also subject to change without notice. HCinema is not responsible for any errors or omissions contained in product descriptions.