Epson EB-E10



EPSON EB-E10

Brief Introduction Beta 2.5	The Epson EB-E10 is an LCD projector with XGA 1024 x 768 resolution and a contrast ratio of 15000:1. The projectors lamp has a rated life of 12,000 hours, which equates to over 16.4 years of use at two hours per day. Files can be played directly using the integrated media player. Horizontal and vertical keystone correction provides flexibility when setting up. An image width of up to 523 cm is possible; if the image width is smaller (we recommend max. 349 cm), even rooms with residual light are no problem. Furthermore, the projector can play 1080P without any problems. The model was manufactured by Epson in 2020 and is no longer current.
Display Type	3 x 0,55" LCD TFT Panel XGA 4/3 Liquid Crystal Display
Ansi-Lumen	Projector: 3600 / Screen: 1200 Lux (200 cm Screen width)
Contrast	Projector: 15000:1 / Screen: 15000:1
Black Level	Projector: 0,2400 min. Lumen / Screen: 0,08 min. Lumen
Offset	
Resolution	XGA 1024 x 768 786.432 Pixel
Video Modes	Pal, SECAM, NTSC, HDTV 720p, 1080i, 1080p, EDTV 480p, 576p **Media player formats:** .JPEG .bmp .gif .png .avi (Motion- JPEG)
Application	Standard-Portabel | External training and company presentations, as well as product presentations. Medium screen width or rooms with a little more ambient light, max. 200 lumens.
Light Source	210W UHE Lamp Article Nr.: ELPLP97
Light Life	6000 h. / 12000 h. in Eco Mode
Operating Costs	5% / 0,02 €
Focus	Manual
Zoom	No Zoom 1,35
Objective	F=1,49-1,72 f=16,9-20,28 mm
Throw Ratio	1,44-1,95:1
Audio	2W
Connections	HDMI in D-sub 15pin in USB in

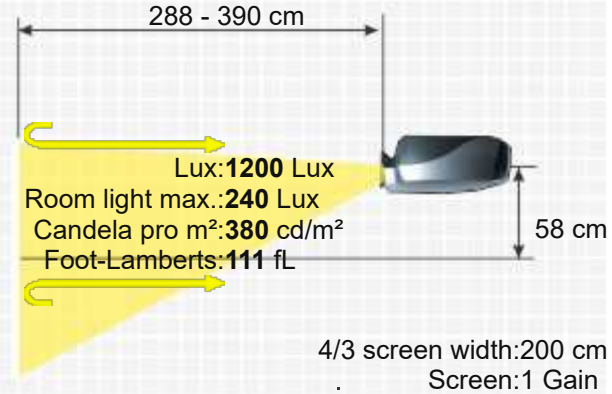



画像はEB-

Ceiling Mounting	Yes, is possible.
Power	327 / 225W in Eco Mode
Size WxHxD	302 x 77 x 234 mm (11,9"x3"x9,2") 5,44 L/dm³
Operating Noise	37 / 28 dB in Eco Mode

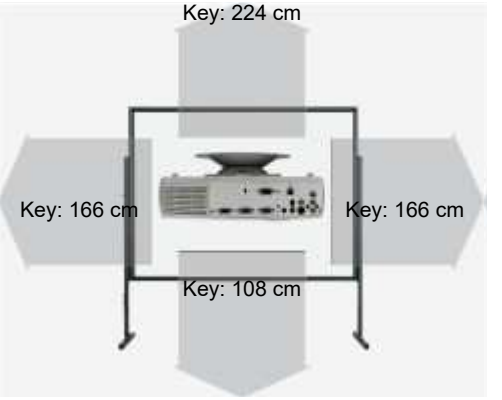

Weight	2,40 kg / 4,41 lbs.
Keystone	Vert.: +/-30° automatisch Hori.: +/-30°
Illumination	-
Frequenz	-
Foot-Lamberts	111 fL / max. 523 cm screen width 380 cd/m²
Features	■ Full HD 1080P compatible ■ Integrated Mediaplayer ■ Eco Mode ■ Automatic and manual vertical keystone correction ■ Kensington Slot ■ Optional Wi-Fi network compatible.
Screen Mirroring	-

Optional accessories

	Nackte Philips Lampe	NLMP25076	70,82 €
	Lampe Ruby	Ruby-LMP25076	83,03 €
	Lampe Original	ELPLP96 / V13H010L96 / ELPLP97 / V13H010L97	101,45 €
	Kompatible Lampe	LMP-K22619	72,91 €
	Fernbedienung	Fernb-uni-V3	22,31 €
	Fernbedienung Original	2198635	28,36 €
	Einzelner Luftfilter Original	ELPAF32 / V13H134A32 / 1557759	27,07 €
	Deckenhalterung 100-120	Halterung100	47,86 €

Status	2020 Discontinued (EOL) // Last update of the data: 2026-05-05 Created: 2020-10-31 17:24:29

Data



More Details

HCinema

https://www.projector-database.com/pro/epsonebe10-en.html

Due to our ongoing commitment to continuously improve the quality of our projector database, this brochure is also subject to change without notice. HCinema is not responsible for any errors or omissions contained in product descriptions.