Epson EB S27



3LCD | Wi Fi Optional | Media Player | USB

Brief Introduction Beta 2.5	The EB S27 LCD has 2700 Ansi-Lumen, a contrast of 10000:1 and an SVGA 800 x 600 resolution. The lamp life is specified by the manufacturer as 10000 hours, which converts to over 13.7 years at 2 hours per day. Includes an integrated media player that can be used to play files directly. The horizontal and vertical keystone correction provides leeway when setting up. 453 cm picture width, the projector will be able to illuminate well. However, if room light is available, the picture width should ideally not exceed 302 cm. The projector was launched in 2015 and is no longer sold by the manufacturer.
Display Type	3 x LCD TFT Panel SVGA 4/3 Liquid Crystal Display
Ansi-Lumen	Projector: 2700 / Screen: 900 Lux (bei 200 cm Screen)
Contrast	Projector: 10000:1 full on/off / Screen: 10000:1 full on/off
Black Level	Projector: 0,2700 min. Lumen / Screen: 0,09 min. Lumen
Offset	-
Resolution	SVGA 800 x 600 480.000 Pixel UXGA 1600 x 1200 compressed
Video Modes	Pal, SECAM, NTSC, HDTV 720p, 1080i, EDTV 480p, 576p **Media player formats:** .jpg .bmp .gif .png .avi
Application	Standard-Portabel | External training and company presentations, as well as product presentations. Medium screen width or rooms with little light, max. 100 lumens.
Light Source	200W UHE Lamp Articel Nr.: V13H134A32
Light Life	5000 h. 10000 h. in Eco Mode
Operating Costs	-
Focus	Manual
Zoom	No Zoom
Objective	F=1,44
Throw Ratio	-
Audio	5W Mono
Connections	HDMI in 2 x D-sub 15pin in 1 x out Cinch Video in Cinch Stereo in S-Video in Mini Jack Audio in und out USB Typ A,B in RS232C Din 9 pin in

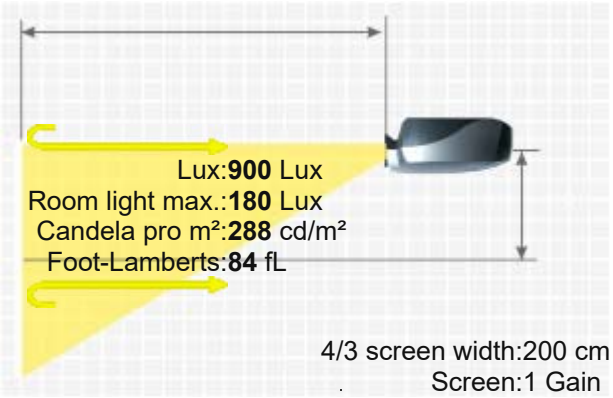



EPSON EB S27

Ceiling Mounting	Yes
Power	284 / 208W Im Eco Mode
Size WxHxD	294,6 x 88,9 x 243,8 mm (11,6"x3,5"x9,6") 6,29 L/dm³
Operating Noise	37 / 29 dB in Eco Mode
Weight	2,50 kg / 4,41 lbs.
Keystone	Vert.: +/-30° Hori.: +/-30°
Illumination	-
Frequenz	-
Foot-Lamberts	84 fL / max. 453 cm screen width 288 cd/m²
Features	■ Direkt Power Off ■ Integrated Mediaplayer ■ Eco Mode ■ Kensington Slot ■ Optional Wi-Fi network compatible.
Optional	Lamp original: ELPLP88 / V13H010L88 2 air filter original: ELPAF32 / V13H134A32 / 1557759 Remote control original: 1626366 Order here: https://www.hcinema.de/lampen/shop-en.php?id=9000376
Status	2015 Discontinued (EOL) // Last update of the data: 2023-08-30
Data	Created: 2015-02-25 16:01:50
More Details	HCinema https://www.projector-database.com/pro/epsonebs27-en.html

Due to our ongoing commitment to continuously improve the quality of our projector database, this brochure is also subject to change without notice. HCinema is not responsible for any errors or omissions contained in product descriptions.