Epson EB X22



EPSON EB X22

Brief Introduction Beta 2.5	The Epson EB X22 standard portable LCD projector has 3000 Ansi lumens, a contrast of 10000:1 and a resolution. The manufacturer specifies a lamp life of 5000 hours, which is over 6.8 years with a daily viewing time of 2 hours. A built-in horizontal and vertical keystone correction provides freedom when positioning the projector. An image width of up to 477 cm is possible. However, the image should be smaller in room light. We recommend max. 318 cm. Furthermore, the projector can play 1080P without any problems. It was launched in 2013 and is no longer offered by the manufacturer Epson.
Display Type	3 x LCD TFT Panel mit MLA XGA 4/3 Liquid Crystal Display with Micro Lense Array
Ansi-Lumen	Projector: 3000 / Screen: 1000 Lux (200 cm Screen width)
Contrast	Projector: 10000:1 full on/off / Screen: 10000:1 full on/off
Black Level	Projector: 0,3000 min. Lumen / Screen: 0,1 min. Lumen
Offset	
Resolution	XGA 1024 x 768 786.432 Pixel
Video Modes	PAL, SECAM, NTSC, HDTV 720p, 1080i, 1080p EDTV 480p, 576p
Application	Standard-Portabel | External training and company presentations, as well as product presentations. Medium screen width or rooms with a little more ambient light, max. 200 lumens.
Light Source	200W UHE Lamp Article Nr.: ELPLP78 / V13H010L78
Light Life	5000 h. 6000 h. in Eco Mode
Operating Costs	-
Focus	Manual
Zoom	Manual 1,62
Objective	F=1,58-1,72 f=196,9-20,28 mm
Throw Ratio	1,48-1,77:1
Audio	1 x 5W
Connections	HDMI in 2 x D-sub 15 pin in 1 x out S-Video in Cinch Video in Cinch Stereo in USB Typ B RJ45 in Mini Jack Audio in und out

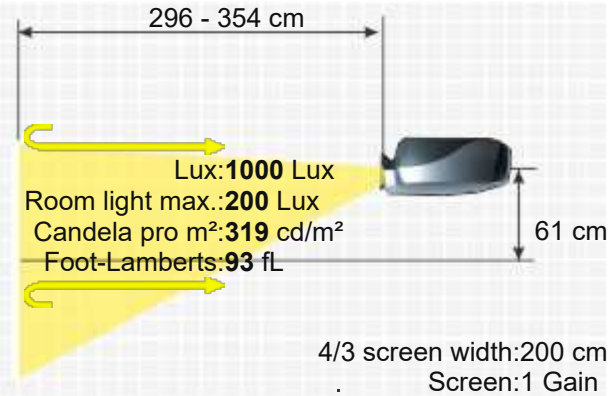

RS232C



Ceiling Mounting	Yes, is possible.
Power	270 / 223W in Eco Mode
Size WxHxD	297 x 87 x 244 mm (11,7"x3,4"x9,6") 6,3 L/dm³
Operating Noise	37 / 29 dB in Eco Mode

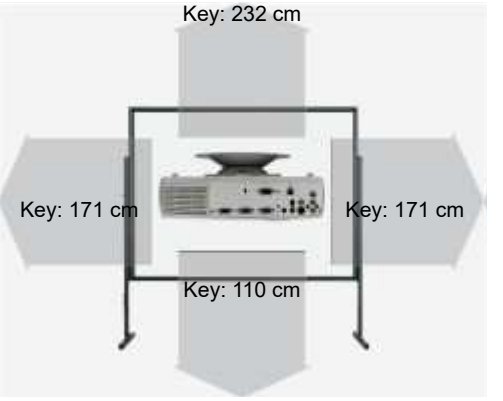

Weight	2,60 kg / 4,41 lbs.
Keystone	Vert.: +/-30° automatisch Hori.: +/-30°
Illumination	-
Frequenz	H-sync: 15-92 kHz V-sync: 50-85 Hz
Foot-Lamberts	93 fL / max. 477 cm screen width 319 cd/m²
Features	■ Full HD 1080P compatible ■ Direkt Power Off ■ Blackboard Modus ■ Eco Mode ■ Automatic and manual vertical keystone correction ■ Kensington Slot ■ sRGB ■ Password protection ■ PJLink™ ■ Lan network compatible. ■ Crestron®-Software compatible.
Screen Mirroring	-

Optional accessories

	Nackte Osram Lampe	NLMP25314	70,82 €
	Lampe Ruby	Ruby-LMP25314	84,04 €
	Lampe Original	ELPLP78 / V13H010L78	EOL €
	Kompatible Lampe	LMP-K22169	52,66 €
	Fernbedienung Original	1547200 / 1599176	30,90 €
	Einzelner Luftfilter Original	ELPAF32 / V13H134A32 / 1557759	27,07 €
	Deckenhalterung 100-120	Halterung100	47,86 €

Status: 2013 Discontinued (EOL) // Last update of the data: 2026-05-05
Created: 2019-11-18 16:36:40

Data




More Details

HCinema

https://www.projector-database.com/pro/epsonebx22-en.html

Due to our ongoing commitment to continuously improve the quality of our projector database, this brochure is also subject to change without notice. HCinema is not responsible for any errors or omissions contained in product descriptions.