Everest DAS 30 (i)



DLP | Kurzdistanz | Whiteboard | USB

Brief Introduction Beta 2.5	The whiteboard Everest DAS 30 (i) DLP projector has 3000 Ansi-Lumen, a contrast of 1600:1 and a XGA 1024 x 768 resolution. The 3000 ANSI lumens brightness makes it possible to achieve a screen width of 477 cm. In a well-lit room, the image should not exceed 318 cm in width. The projector also offers a whiteboard function that makes training and presentation rooms interactive. The model has been on the market since 2013 and is no longer offered by the manufacturer Everest.
Display Type	1 x 0,55" DLP Chip XGA 4/3 Ti Digital Light Processing Chip
Ansi-Lumen	Projector: 3000 / Screen: 1000 Lux (bei 200 cm Screen)
Contrast	Projector: 1600:1 full on/off / Screen: 1600:1 full on/off
Black Level	Projector: 1,8750 min. Lumen / Screen: 0,626 min. Lumen
Offset	
Resolution	XGA 1024 x 768 786.432 Pixel UXGA 1600 x 1200 compressed
Video Modes	Pal, SECAM, NTSC, HDTV 720p, 1080i, EDTV 480p, 576p
Application	Whiteboard | Training and company presentations, as well as product presentations. Medium screen width or rooms with a little more ambient light, max. 200 lumens.
Light Source	230W Lamp
Light Life	3000 h. 4000 h. in eco Mode
Operating Costs	-
Focus	Manual
Zoom	No Zoom
Objective	-
Throw Ratio	0,68:1
Audio	1 x 2W Mono
Connections	2 x D-sub 15 pin in 1 x out S-Video in Cinch Video in mini USB in Mini Jack Audio in RS232C Din 9 pin in
Ceiling Mounting	Yes
Power	265W
Size WxHxD	284 x 96 x 233 mm (11,2"x3,8"x9,2") 6,35 L/dm³
Operating Noise	33 / 30 dB in Eco Mode
Weight	2,30 kg / 5,07 lbs.
Keystone	Vert.: +/-40°
Illumination	70%

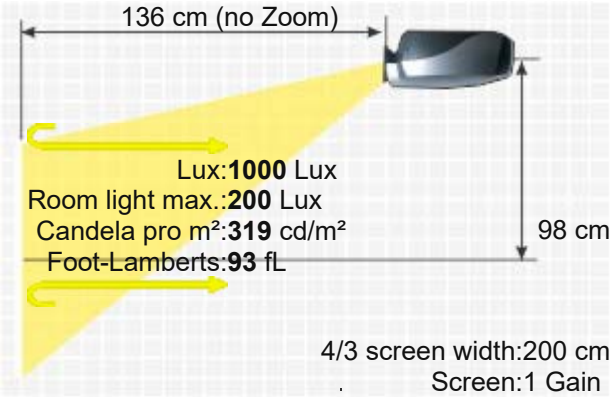



EVEREST DAS 30 (I)

Frequenz	H-sync: 31-90 kHz
Foot-Lamberts	93 fL / max. 477 cm screen width
	319 cd/m²
Features	■ Eco Mode ■ Short-throw projector ■ 6-segment colour wheel ■ I with whiteboard function.
Status	2013 Discontinued (EOL) // Last update of the data: 2023-08-04
Data	

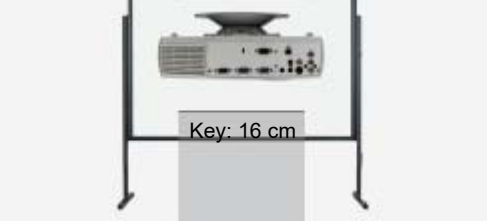

More Details

HCinema

https://www.projector-database.com/pro/everestdas30i-en.html

Due to our ongoing commitment to continuously improve the quality of our projector database, this brochure is also subject to change without notice. HCinema is not responsible for any errors or omissions contained in product descriptions.