Faroudja FDP-DILA3

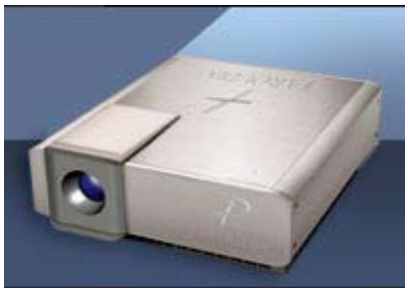

Display Type	3 x 0,7" DLP Chip SXGA 4/3 Ti Digital Light Processing Chip		
Ansi-Lumen	Projector 3500	Screen	1132 Lux (bei 203 cm Screen)
Contrast	-		-
Black Level	-		-
Offset	-		
Resolution	SXGA+ 1400 x 1050 1.470.000 Pixel		
Video Modes	NTSC/PAL/SECAM/NTSC 4.43/PAL-M/PAL-N		
Disc Recognition	DVD | ~~HD Blu-ray~~ | ~~3D Blu-ray~~ | ~~4K UHD Blu-ray~~		
Application	High-End Homecinema | Medium screen width or rooms with a little more ambient light, max. 200 lumens.		
Light Source	250W Lamp		
Light Life	-		
Operating Costs	-		
Focus	-		
Zoom	-		
Objective	-		
Throw Ratio	-		
Audio	-		

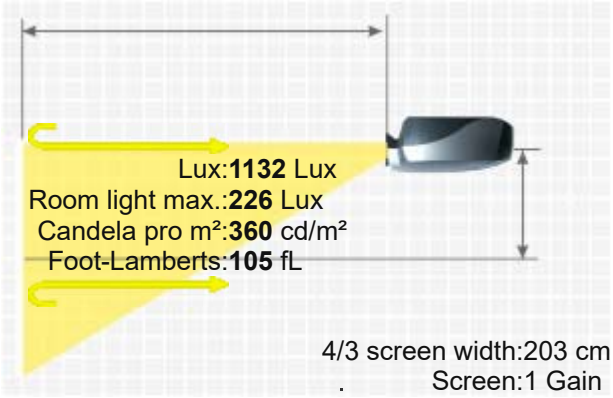

Connections	DVI in D-sub 15pin in 5 x BNC RGBHV in S-Video in Cinch Video in Mini jack in RS232C Din 9pin in und out 12V Trigger

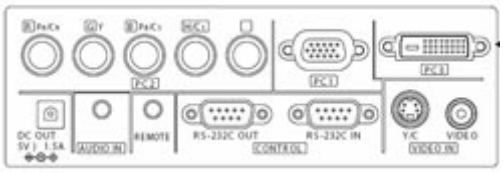

Ceiling Mounting	Yes
Power	-
Size WxHxD	-
Operating Noise	-
Weight	-
Keystone	-
Illumination	-
Frequenz	H-sync: 15-120 kHz V-sync: 50-120 Hz

FAROUDJA FDP-DILA3

Foot-Lamberts	105 fL / max. 515 cm screen width
	360 cd/m²
Features	Freeze sRGB
Status	- Discontinued (EOL) // Last update of the data: 2023-08-04
Data	
More Details	https://www.projector-database.com/pro/faroudjafdpdila3-en.html

Due to our ongoing commitment to continuously improve the quality of our projector database, this brochure is also subject to change without notice. HCinema is not responsible for any errors or omissions contained in product descriptions.