Faroudja FDP-DLPHD10



The Faroudja FDP-DLPHD10 DLP projector has 800 Ansi lumens, a contrast of 1800:1 and an HDTV 1280 x 720 resolution. The service life of the lamp is up to 6000 hours, which is equivalent to over 8.2 years at 2 hours per day. Built-in horizontal and vertical keystone correction provides freedom when positioning the projector. An image width of up to 287 cm is possible. However, the image should be smaller in room light. We recommend max. 191 cm. The model was built by Faroudja in 2003 and is no longer current, but is still very popular in our projector database.

Brief Introduction Beta 2.5			
Display Type	1 x HD2 DDR 0,8" Dark Metal DLP Chip HDTV 16/9 Ti Digital Light Processing Chip		
Ansi-Lumen	Projector: 800	Screen: 345 Lux (bei 203 cm Screen)	
Contrast	Projector: 1800:1 full on/off	Screen: 1800:1 full on/off	
Black Level	Projector: 0,4444 min. Lumen	Screen: 0.192 min. Lumen	
Offset	-		
Resolution	HDTV 1280 x 720 921.600 Pixel		
Video Modes	NTSC/PAL/SECAM/NTSC 4.43/PAL-M/PAL-N		
Disc Recognition	DVD | ~~HD Blu-ray~~ | ~~3D Blu-ray~~ | ~~4K UHD Blu-ray~~		
Application	High-End Homecinema | Small screen width, rooms with very little ambient light below 100 lumens.		
Light Source	120W UHP Lamp Articel Nr.: LMPf3315		
Light Life	6000 h.		
Operating Costs	-		
Focus	Powered		
Zoom	Powered 1,33		
Objective	F=2,7-3,3		
Throw Ratio	-		
Audio	-		
Connections	DVI-D in D-sub 15pin in S-Video in Cinch Video in		
Ceiling Mounting	Yes		
Power	180W		
Size WxHxD	352 x 174 x 318 mm (13,9"x6,9"x12,5") 19,48 L/dm³		
Operating Noise	35dB		
Weight	5,00 kg / 11,02 lbs.		
Keystone	Vert.: +/-18° Hori.: +/-8°		
Illumination	-		
Frequenz	H-sync: 15-80 kHz V-sync: 40-100 Hz		
Foot-Lamberts	32 fL / max. 287 cm screen width		

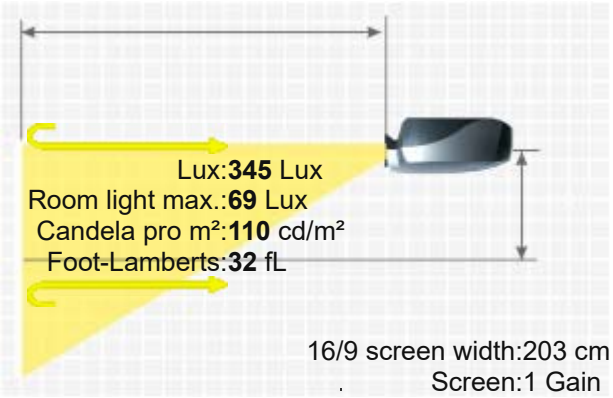

FAROUDJA FDP-DLPHD10

	110 cd/m²
Features	■ Freeze ■ Gamma correction ■ External video processor included. ■ DCDi: FLI 2200 2:2 and 3:2 pull down ■ 6-segment colour wheel with 5 speed ■ vertical lens shift
In Test	-
Status Data	2003 Discontinued (EOL) // Last update of the data: 2023-08-08
More Details	https://www.projector-database.com/pro/faroudjafdpdlphd10-en.html

Due to our ongoing commitment to continuously improve the quality of our projector database, this brochure is also subject to change without notice. HCinema is not responsible for any errors or omissions contained in product descriptions.