Forever Plus FPC 250

Brief Introduction Beta 2.5	The Forever Plus FPC 250 game portable projector has 250 Ansi lumens, a contrast of 1000:1 and a WVGA 858 x 600 resolution. A picture width of up to 161 cm is possible as the projector has 250 Ansi lumens. However, if room light is available, the picture should be max. 107 cm wide. This model is no longer offered by Forever Plus.
Display Type	[redacted] -
Projector Ansi-Lumen	250
Contrast	1000:1 full on/off
Black Level	0,2500 min. Lumen
Offset	-
Screen Ansi-Lumen	108 Lux (bei 203 cm Screen)
Contrast	1000:1 full on/off
Black Level	0.108 min. Lumen
Resolution	WVGA 858 x 600 514.800 Pixel
Video Modes	PAL, SECAM, NTSC, HDTV 720p,
Application	Game-Portabel | Very portable, small-screen projections. Very narrow picture width and rooms with very little light.
Light Source	LED
Light Life	-
Operating Costs	0,00 € LED
Focus	-
Zoom	-
Objective	-
Throw Ratio	-
Audio	2 x 2W
Connections	HDMI USB SD-Card Slot
Ceiling Mounting	-
Power	75W
Size WxHxD	137 x 55 x 131 mm (5,4"x2,2"x5,2") 0,99 L/dm³
Operating Noise	-
Weight	0,600 kg / 0 lbs.
Keystone	-
Illumination	-
Frequenz	-
Foot-Lamberts	10 fL / max. 161 cm screen width 34 cd/m²
Features	-
Status Data	- Discontinued (EOL) // Last update of the data: 2024-09-16

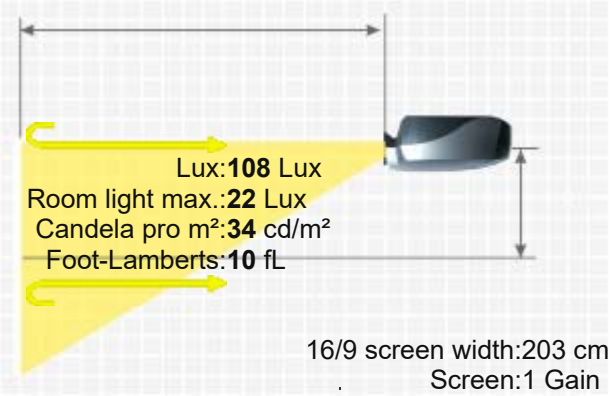

More Details

https://www.projector-database.com/pro/foreverplusfpc250-en.html

Due to our ongoing commitment to continuously improve the quality of our projector database, this brochure is also subject to change without notice. HCinema is not responsible for any errors or omissions contained in product descriptions.

FOREVER PLUS FPC 250