Fuchiview PEP01





Display Type	[redacted] -		
Ansi-Lumen	7 Lumen	Screen	Lux (bei 200 cm Screen)
Contrast	80:1		-
Black Level	-		-
Offset	-		
Resolution	VGA 640 x 480 307.200 Pixel XGA 1024 x 768 compressed		
Video Modes	Pal, SECAM, NTSC, **Media player formats:** JEPG/ BMP AVI / MOV / DivX / XviD 3GP / MP4		
Disc Recognition	DVD (komprimiert) | ~~HD Blu-ray~~ | ~~3D Blu-ray~~ | ~~4K UHD Blu-ray~~		
Application	Short Distance | Very narrow picture width and rooms with very little light.		
Light Source	-		
Light Life	-		
Operating Costs	-		
Focus	Manual		
Zoom	No Zoom		
Objective	-		
Throw Ratio	0,66:1		
Audio	-		

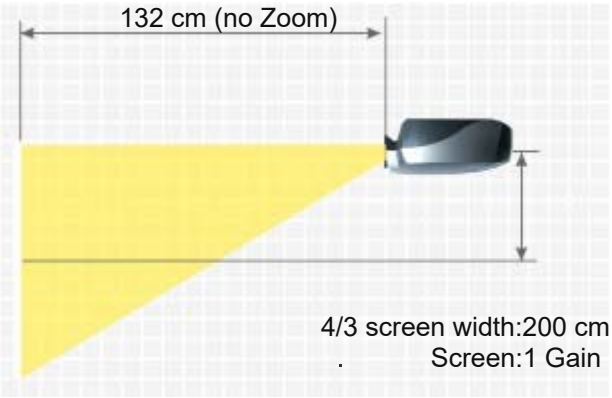

Connections	Cinch Video in
Ceiling Mounting	Nein
Power	-
Size WxHxD	50 x 22 x 115 mm (2"x0,9"x4,5") 0,13 L/dm³
Operating Noise	-
Weight	0,160 kg / 0,35 lbs.
Keystone	-
Illumination	-
Frequenz	-
Foot-Lamberts	-
	-
Features	■ Integrated Mediaplayer ■ Short-throw projector ■ PEP01 = grey ■ PEP02 = red ■ PEP03 = black
Status	2008 Discontinued (EOL) // Last update of the data: 2023-08-04
Data	

FUCHIVIEW PEP01

More Details

HCinema

https://www.projector-database.com/pro/fuchiviewPEP01-en.html

Due to our ongoing commitment to continuously improve the quality of our projector database, this brochure is also subject to change without notice. HCinema is not responsible for any errors or omissions contained in product descriptions.