MULTIMEDIA LCD PROJECTOR

CP-S210

HITACHI

Inspire the Next



Superior Total-Balance Projector

Ultra Quiet 27dB



Front Air Exhaust



Excellent Video Quality



Quiet operation, ease of use, and beautiful image quality lets your audience concentrate on your presentation.

Amazingly Low Noise: Whisper Mode 27dB*

This helps your audience concentrate on the screen without being bothered by the noise during your presentations.

*Operating noise is 31dB in Standard mode. Brightness in Whisper mode is approximately 20% lower.

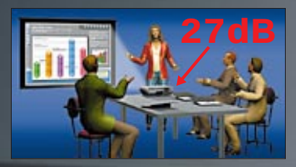

Front Air Exhaust

Unlike rear air exhaust, front air exhaust does not make you uncomfortable- so you can concentrate fully on the screen.



Beautiful Video Quality

Achieves excellent video quality thanks to progressive scan, 3:2 pull down, and 3D Y/C separation.



Wide Angle Lens

Enables you to project a 60” image from a distance of only 1.8m (6 ft).

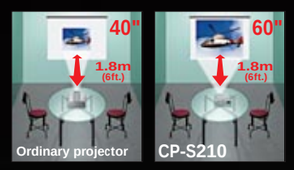

Full Range of Terminals

Component video input and HDTV compatibility.

*HDTV: 750p (720p), 1125i (1080i/1035i); SDTV: 525i (480i), 525p (480p), 625i (575i)



My Memory

You can set four patterns in advance to provide the best brightness and color adjustment for the types of images to be shown.



CP-S210 SVGA

Compact Body, High Brightness

Weighs only 2.9kg (6 lbs. 6 oz). And brightness is 1,200 ANSI lumens.

New Versatile Remote Control

A multi-function remote control makes operation even easier.

16:9 and 4:3 Aspect Ratio Compatibility

Other Convenient Features

Vertical Keystone Correction, 4x Partial Magnification, Freeze Function.

CP-S210

Specifications		
Model name		CP-S210
Liquid crystal panel structure		0.55" polysilicon active-matrix TFT x 3
Number of pixels		480,000 pixels (V600 x H800)
Resolution		800 x 600 color pixels
Noise (Whiper mode)		27dB
Frequency	**f_H [kHz]**	15~91
	fv [Hz]	50~120
Lens		Manual Zoom (F1.6~1.8) 1:1.2
Lamp		130W UHB
Brightness		1,200 ANSI Lumens
Speaker		1W x 1
Power supply		AC100-120V/AC220-240V
Operating temperature		0-35˚C (32-95˚F)
Input signals	**RGB input**	VGA, SVGA, XGA, SXGA, UXGA, MAC13", MAC16"
	Video input	NTSC, NTSC4.43, PAL, PAL60, SECAM, M-PAL, N-PAL, HDTV: 750p (720p), 1125i (1080i/1035i) SDTV: 525i (480i), 525p (480p), 625i (575i)
Terminals	**Video input**	S-Video: Mini DIN 4-pin terminal x 1 Composite video: RCA jack terminal x 1 Component video: RCA jack terminal x 3 Audio: RCA jack terminal x 2 (L/R)
	RGB input	Analog RGB: D-sub 15-pin shrink terminal x 1 Audio: Stereo mini jack x 1
	Control terminal	D-sub 9-pin shrink terminal x 1
Regulatory approvals		UL60950/C-UL, FCC Part 15, Class B, CE, TUV EN60950
Dimensions (WxHxD)		332x92x254mm (13-1/16"x3-5/8"x10") [excl. protruding part]
Weight		2.9kg (6 lbs. 6 oz.)
Standard accessories		RGB cable, Soft case, Batteries, Safety instruction, Quick Start Guide, Power cord, Remote control, Lens cap, User's manual

•Design and specifications are subject to change without notice.
•The comparison photos in this catalog are simulations.
•LCD panels, polarizors and other optical components and cooling fans may need replacement after prolonged usage. For more details, please consult the Hitachi sales representative listed below.

powered by pixelworks

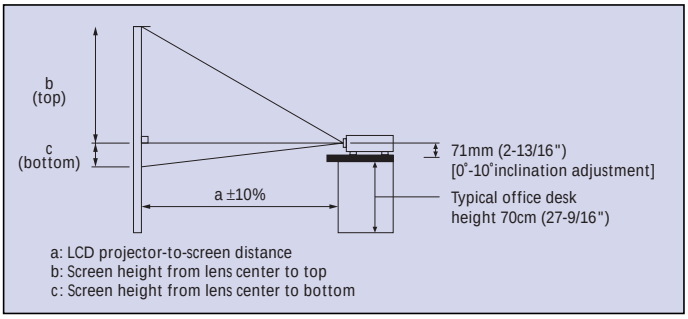

a: LCD projector-to-screen distance
b: Screen height from lens center to top
c: Screen height from lens center to bottom

Screen Size (inch)	a Min	a Max	b (top)	c (bottom)
30	0.9m (35")	1.1m (42")	41cm (16")	5cm (2")
40	1.2m (47")	1.4m (56")	55cm (22")	6cm (2")
50	1.5m (59")	1.8m (71")	69cm (27")	8cm (3")
60	1.8m (71")	2.2m (85")	82cm (32")	9cm (4")
70	2.1m (83")	2.5m (99")	96cm (38")	11cm (4")
80	2.4m (95")	2.9m (114")	110cm (43")	12cm (5")
90	2.7m (107")	3.3m (128")	123cm (49")	14cm (5")
100	3.0m (119")	3.6m (143")	137cm (54")	15cm (6")
120	3.6m (143")	4.4m (171")	165cm (65")	18cm (7")
150	4.6m (179")	5.5m (215")	206cm (81")	23cm (9")
200	6.1m (240")	7.3m (287")	274cm (108")	30cm (12")
250	7.6m (300")	9.1m (359")	343cm (135")	38cm (15")
300	9.2m (360")	10.9m (431")	411cm (162")	46cm (18")

Dimensions
(incl.protruding part)

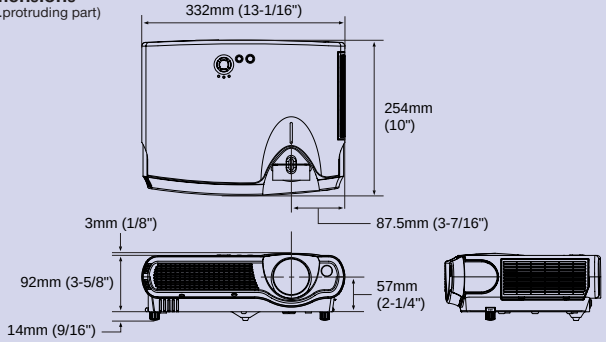

Hitachi, Ltd. Digital Media Division (Yokohama Plant) has received ISO 14001 certification.

ISO 14001 JACO — UKAS ENVIRONMENTAL MANAGEMENT 051

HITACHI

Hitachi Europe Ltd.
Whitebrook Park, Lower Cookham Road, Maidenhead, Berkshire, SL6 8YA, UK
Tel: +44-1628-643000 Fax: +44-1628-643404 www.hitachidigitalmedia.com
Hitachi America, Ltd. Digital Media Division
Hitachi Plaza 2000 Sierra Point Parkway, Brisbane, CA 94005-1835, U.S.A.
Tel: +1-800-HITACHI Fax: +1-650-244-7776 www.hitachi.com/digitalmedia
Hitachi Canada Ltd.
6740 Campobello Road, Mississauga, Ontario L5N2L8, Canada
Tel: +1-905-821-4545 Fax: +1-905-821-1011 www.hitachi.ca
Hitachi Home Electronics Asia (S) Pte. Ltd.
16 Collyer Quay #31-00 Hitachi Tower, Singapore 049318
Tel: +65-6536-2520 Fax: +65-6536-2521 www.hitachimultimedia.com.sg
Hitachi Sales (Malaysia) Sdn. Bhd.
Wisma Hitachi, No.2, Lorong 13/6A, 46200 Petaling Jaya,
Selangor Darul Ehsan, Malaysia
Tel: +60-3-79573455 Fax: +60-3-79556090
Hitachi Sales (Thailand), Ltd.
994, 996 Sol Thonglor, Sukhumvit 55 Road, Klongton, Klongtoey,
Bangkok 10110, Thailand
Tel: +66-2-381-8381 Fax: +66-2-381-9520
Hitachi (Hong Kong), Ltd.
18th Floor, Ever Gain Centre, 28 On Muk Street, Shatin, N.T., Hong Kong
Tel: +852-2113-8883 Fax: +852-2780-4178 www.hitachi-multimedia.com.hk
Hitachi Sales Corp. of Taiwan
2nd Floor, No.65, Nanking East Road, Section 3, Taipei, Taiwan
Tel: +886-2-2516-0500 Fax: +886-2-2516-1501
Hitachi Australia Ltd.
Level 3, 82 Waterloo Road, North Ryde, NSW 2113, Australia
Tel: +61-2-9888-4100 Fax: +61-2-9888-4188 www.hitachi.com.au

Printed in Japan (H) **NM-E270P** 0703