HITACHI
Inspire the Next

CP-S210 series



- 1,200 ANSI lumens
- Native SVGA resolution
- 6.5 lbs.
- RGB/component/composite/S-video inputs
- HDTV theater ready
- Short throw lens
- My Memory
- Vertical keystone correction
- Video noise reduction
- 16:9 mode
- Digital zoom & freeze function
- Comes with soft case
- Whisper mode 27dB
- Progressive Scan Technology
- Manual zoom & manual focus
- Color temperature and gamma correction
- Reverse image function for ceiling mount
- Kensington security slot

SPECIFICATIONS

Model name		CP-S210 series
Liquid crystal panel structure		0.55" polysilicon active-matrix TFT x 3
Number of pixels		480, 000 pixels (H800 x V600)
Resolution		800 x 600 color pixels
Colors		16.7 million colors
Aspect ratio		Native 4:3/16:9 compatible
Lens		Manual zoom 1:1.2 (F1.6 - 1.8)
Throw ratio (distance:width)		1.47 ~ 1.79 : 1
Lamp		130W UHB
Brightness		1,200 ANSI lumens (approx. 960 in whisper mode)
Expected lamp life		Approx. 2,000 hours
Contrast ratio		300 : 1
Speakers		1W x 1
Power supply		AC90-132V/AC220-240V 50/60Hz
Power consumption		220W
Operating temperature		0 ~ 35°C (32° ~ 95°F)
Input signals	RGB	VGA, SVGA, XGA/SXGA/UXGA (COMPRESSED), MAC13", MAC16"
	Composite video	NTSC, NTSC4.43, PAL, PAL-M, PAL-N, SECAM, PAL60, S-video
	Component video	480i, 625i, 480p, 1,080i, 720p
Acoustic noise level		32dB (27dB in whisper mode)
H sync		15kHz ~ 91kHz
V sync		50Hz ~ 120Hz
Vertical keystone correction		Digital keystone +/- 15°
Horizontal keystone correction		–
Approvals		UL, C-UL, FCC Class B, CE, TUV
Input/Output terminals	RGB input	RGB Audio	D-sub 15-pin connector x 1 Stereo mini jack x 1
	Video input	S-video Composite video Component video Audio	Mini DIN 4-pin input connector x 1 RCA jack x 1 RCA jack x 3 RCA jack x 2 (L/R)
	Control terminals Compatible controls		D-sub 9-pin connector x 1 RS-232C (Serial)
Chassis	Dimensions		13.1" x 9.8" x 3.6" (W x H x D)
	Weight		6.5 lbs.
	Supplied accessories		Remote control, batteries (AA), power cord, RGB cable, multiple language operator/safety manual, soft case
Replacement parts	Lamp		CPS210LAMP (Part #DT00581)
	Remote control		Part #HL01894
	Mouse kit		Part #RMU101 Optional

HITACHI
Inspire the Next

CP-S210 series





Screen Size 4.3		Throw distance	
Diagonal*	Width*	Min*	Max*
40	32	47	56
60	48	71	85
80	64	95	114
100	80	119	143
120	96	143	171
150	120	179	215
200	160	240	287

Throw ratio: 1.47 ~ 1.79:1 (distance:width)
*: Measured in inches

CP-S210 series Dimensions
(incl.protruding part)

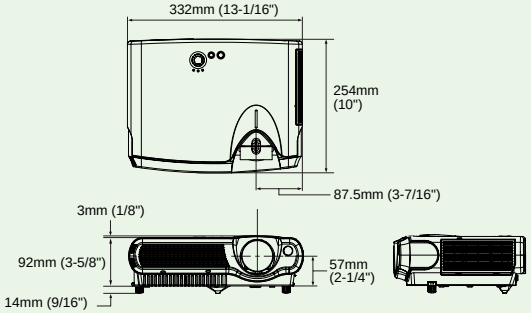

For sales information, call 1.800.225.1741.
Printed 09/03
Specifications are subject to change without notification.